At your side.

brother®

USER'S GUIDE

MFC-8220

CE

At your side.

brother®

Version B

THIS EQUIPMENT IS DESIGNED TO WORK WITH A TWO WIRE ANALOGUE PSTN LINE FITTED WITH THE APPROPRIATE CONNECTOR.

APPROVAL INFORMATION

Brother advises that this product may not function correctly in a country other than where it was originally purchased, and does not offer any warranty in the event that this product is used on public telecommunication lines in another country.

Compilation and Publication Notice

Under the supervision of Brother Industries Ltd., this manual has been compiled and published, covering the latest product descriptions and specifications.

The contents of this manual and the specifications of this product are subject to change without notice.

Brother reserves the right to make changes without notice in the specifications and materials contained herein and shall not be responsible for any damages (including consequential) caused by reliance on the materials presented, including but not limited to typographical and other errors relating to the publication.

brother

EC Declaration of Conformity under the R & TTE Directive

Manufacturer
Brother Industries, Ltd.
15-1, Naeshiro-cho, Mizuho-ku,
Nagoya 467-8561, Japan

Plant
Brother Corporation (Asia) Ltd.,
Brother Buji Nan Ling Factory,
Gold Garden Ind., Nan Ling Village,
Buji, Rong Gang, Shenzhen, China

Brother Industries U.K. Ltd.,
Vauxhall Industrial Estate,
Ruabon, Wrexham
LL14 6HA, United Kingdom

Herewith declare that:

Products description	**: Facsimile Machine**
Type	**: Group 3**
Model Name	**: MFC-8220**

are in conformity with provisions of the R & TTE Directive (1999/5/EC) and we declare compliance with the following standards :

Safety : EN60950:2000

EMC : EN55022:1998 Class B
EN55024:1998
EN61000-3-2:1995 + A14:2000
EN61000-3-3:1995

Year in which CE marking was First affixed : 2004

Issued by	: Brother Industries, Ltd.
Date	: 22nd October 2003
Place	: Nagoya, Japan
Signature	:

Takashi Maeda
Takashi Maeda
Manager
Quality Management Group
Quality Management Dept.
Information & Document Company

Safety precautions

To use the MFC safely

Save these instructions for later reference.

WARNING

	There are high voltage electrodes inside the MFC. Before you clean the MFC or clear a paper jam, make sure you have unplugged the power cord from the AC power socket.		Do not handle the plug with wet hands. Doing this might cause an electrical shock.
	After you use the MFC, some internal parts are extremely HOT! To prevent injuries, be careful not to put your fingers in the area shown in the illustration.		

- Use caution when installing or modifying telephone lines. Never touch telephone wires or terminals that are not insulated unless the telephone line has been disconnected at the wall socket. Never install telephone wiring during a lightning storm. Never install a telephone wall socket in a wet location.
- This product must be installed near a socket that is easily accessible. In case of emergencies, you must disconnect the power cord from the socket in order to shut off power completely.

⚠	**IMPORTANT SAFETY INSTRUCTIONS** When using your telephone equipment, basic safety precautions should always be followed to reduce the risk of fire, electric shock and injury to persons, including the following: 1. Do not use this product near water, for example, near a bath tub, wash bowl, kitchen sink or laundry tub, in a wet basement or near a swimming pool. 2. Avoid using this product (other than a cordless type) during an electrical storm. There may be a remote risk of electric shock from lightning. 3. Do not use this product to report a gas leak in the vicinity of the leak. 4. Use only the power cord and batteries indicated in this guide. Do not dispose of batteries in a fire. They may explode. Check with local codes for possible special disposal instructions. SAVE THESE INSTRUCTIONS

Choosing a location

Place your MFC on a flat, stable surface that is free of vibration and shocks, such as a desk. Put the MFC near a telephone wall socket and a standard, grounded AC power outlet. Choose a location where the temperature remains between 10° and 32.5°C.

Caution

- Avoid placing your MFC in a high-traffic area.
- Do not place near heaters, air conditioners, water, chemicals, or refrigerators.
- Do not expose the MFC to direct sunlight, excessive heat, moisture, or dust.
- Do not connect your MFC to electrical sockets controlled by wall switches or automatic timers.
- Disruption of power can wipe out information in the MFC's memory.
- Do not connect your MFC to electrical sockets on the same circuit as large appliances or other equipment that might disrupt the power supply.
- Avoid interference sources, such as speakers or the base units of cordless phones.

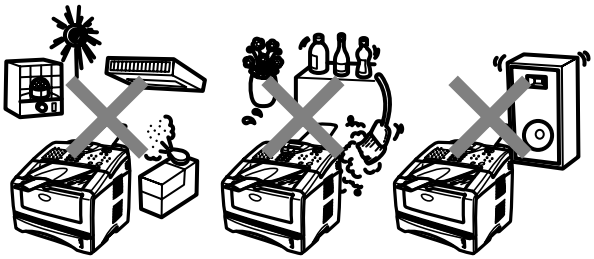

Quick Reference Guide

Sending faxes

Automatic Transmission

1. If it is not illuminated in green, press (**Fax**).
2. Place the original document face down in the ADF.
3. Enter the fax number using One-Touch, Speed-Dial, Search or the dial pad.
4. Press **Start**.

Real Time Transmission

You can send faxes in real time.

1. If it is not illuminated in green, press (**Fax**).
2. Place the original document face down in the ADF.
3. Press **Menu**, **2**, **2**, **5**.
4. Press or to select `On`, and then press **Set**.

   —**OR**—

   For the next transmission only, press or to select `Next Fax Only`, and then press **Set**.
5. For the next fax only, press or to select `Next Fax:On`, and then press **Set**.
6. Press **1** if you want to choose more settings and the LCD will return to the `Setup Send` menu.

   —**OR**—

   Press **2** to fax.
7. Enter the fax number.
8. Press **Start**.

Receiving faxes

Select Receive Mode

1. Press **Menu**, **0**, **1**.
2. Press or to select `Fax Only`, `Manual`, `Fax/Tel` or `External TAD` and then press **Set**.

Storing numbers

Storing One-Touch Dial numbers

1. Press **Menu**, **2**, **3**, **1**.
2. Press the One-Touch key where you want to store the number.
3. Enter a number (up to 20 digits), and then press **Set**.
4. Enter a name (or leave it blank), and then press **Set**.
5. Press **Stop/Exit**.

Storing Speed-Dial numbers

1. Press **Menu**, **2**, **3**, **2**.
2. Enter a three-digit Speed-Dial number, and then press **Set**.
3. Enter a number (up to 20 digits), and then press **Set**.
4. Enter a name (or leave it blank), and then press **Set**.
5. Press **Stop/Exit**.

Dialling operations

One-Touch Dialling/ Speed-Dialling

1. If it is not illuminated in green, press (**Fax**).
2. Place the original document face down in the ADF.
3. Press the One-Touch key of the number you want to call
4. —**OR**—
5. Press **Search/Speed Dial**, press **#**, and then press the three-digit Speed-Dial number.
6. Press **Start**.

Using Search

1. If it is not illuminated in green, press (**Fax**).
2. Press **Search/Speed Dial**, and then enter the first letter of the name you're looking for.
3. Press or to search the memory.
4. Press **Start**.

Making copies

Single copy

1. Press (**Copy**) to illuminate it in green.
2. Place the original document face down in the ADF.
3. Press **Start**.

Sorting multiple copies

1. Press (**Copy**) to illuminate it in green.
2. Place the original document face down in the ADF.
3. Use the dial pad to enter the number of copies you want (up to 99).
4. Press **Options** and or to select `Stack/Sort`, and then press **Set**.
5. Press or to select `Sort` (or `Stack`) and then press **Set**.
6. Press **Start**.

Table of Contents

1

Introduction 1-1
Using this Guide 1-1
Finding information 1-1
Symbols used in this Guide 1-1
MFC part names and operations 1-2
Control panel overview 1-4
Back light color shows the MFC status 1-6
About fax machines 1-8
Fax tones and handshake 1-8
ECM (Error Correction Mode) 1-9
Connecting the MFC 1-10
Connecting an external telephone 1-10
Connecting an external telephone answering device (TAD) 1-11
Sequence 1-11
Connections 1-12
Recording outgoing message (OGM) on an external TAD 1-13
Using extension telephones (U.K. only) 1-14
Multi-line connections (PBX) 1-16
If you are installing the MFC to work with a PBX 1-16
Custom features on your phone line 1-16

2

Loading paper and original documents 2-1
About paper 2-1
Paper specifications for each paper tray 2-1
Recommended paper 2-2
Choosing acceptable paper 2-3
How to load paper 2-3
To load paper or other media in the paper tray 2-3
To load paper or other media in the manual feed tray 2-6
Using the automatic document feeder (ADF) 2-8

3

On-screen programming 3-1
User-friendly programming 3-1
Menu table 3-1
Memory Storage 3-1
Navigation keys 3-2

4 **Getting started** **4-1**
Initial Setup 4-1
Setting the Date and Time 4-1
Setting the Station ID 4-2
Entering text 4-3
Inserting spaces 4-3
Making corrections 4-4
Repeating letters 4-4
Special characters and symbols 4-4
Setting the Phone Line Type 4-5
PABX and TRANSFER 4-5
General Setup 4-6
Setting the Mode Timer 4-6
Setting the Paper Type 4-6
Setting the Paper Size 4-7
Setting the Ring Volume 4-8
Setting the Beeper Volume 4-8
Setting the Speaker Volume 4-9
Turning on Automatic Daylight Savings Time 4-9
Toner Save 4-9
Sleep Time 4-10
Power Save 4-11
Setting the LCD Contrast 4-11
Setting the Tray Use for Copy mode 4-12
Setting the Tray Use for Fax mode 4-13
Setting Tone or Pulse dialling mode (Excluding the Nordic Countries) 4-13

5 **Setup Receive** **5-1**
Basic receiving operations 5-1
Choosing the Receive Mode 5-1
To select or change your Receive Mode 5-2
Setting the Ring Delay 5-3
Setting the F/T Ring Time (Fax/Tel mode only) 5-4
Fax Detect 5-5
Printing a reduced incoming fax (Auto Reduction) 5-6
Reception into memory 5-7
Printing a fax from the memory 5-8
Setting the Print Density 5-8
Advanced receiving operations 5-9
Operation from extension telephones 5-9
For Fax/Tel mode only 5-9
Using a cordless external handset 5-10

Changing the remote codes 5-10
Polling 5-11
Secure Polling 5-11
Setup for Polling Receive (Standard) 5-11
Setup for Polling Receive with Secure Code 5-12
Setup Delayed Polling Receive 5-12
Sequential Polling 5-13
Telephone services 5-14
BT Call Sign (U.K. only) 5-14
To enable the MFC to work with BT Call Sign (Only with your external phone) 5-14

6

Setup Send 6-1
How to enter Fax mode 6-1
How to dial 6-1
Manual dialling 6-1
One-Touch dialling 6-2
Speed-Dialling 6-2
Search 6-3
How to fax 6-3
Manual transmission 6-3
Automatic transmission 6-4
Out of Memory message 6-4
Sending a fax at the end of a conversation 6-4
Basic sending operations 6-5
Sending faxes using multiple settings 6-5
Contrast 6-5
Fax Resolution 6-6
Manual and automatic fax Redial 6-7
Dual Access 6-7
Real Time Transmission 6-8
Checking job status 6-9
Cancelling a fax in progress 6-9
Cancelling a scheduled job 6-9
Advanced sending operations 6-10
Composing the electronic Cover Page 6-10
Composing your own comments 6-11
Cover page for the next fax only 6-12
Send a cover page for all faxes 6-13
Using a printed cover page 6-13
Broadcasting 6-14
Overseas Mode 6-16
Delayed Fax 6-17
Delayed Batch Transmission 6-18

Setting up Polled Transmission 6-18
Memory Security 6-20
Setting up the password 6-20
Turning Memory Security on 6-21
Turning Memory Security off 6-21

7 **Auto Dial numbers and dialling options 7-1**
Storing numbers for easy dialling 7-1
Storing One-Touch Dial numbers 7-1
Storing Speed-Dial numbers 7-3
Changing One-Touch and Speed-Dial numbers 7-4
Setting up Groups for Broadcasting 7-5
Dialling operations 7-7
Access codes and credit card numbers 7-7
Pause 7-8
Tone or Pulse 7-8
Telephone (voice) operations 7-9
Making a telephone call 7-9
Using an external telephone 7-9

8 **Remote Fax Options 8-1**
Programming a Fax Forwarding number 8-1
Setting Fax Storage 8-2
Setting your Remote Access Code 8-3
Remote Retrieval 8-4
Using your Remote Access Code 8-4
Remote commands 8-5
Retrieving fax messages 8-6
Changing your Fax Forwarding number 8-6

9 **Printing reports 9-1**
Fax settings and activity 9-1
Customizing the Transmission Verification Report 9-1
Setting the Journal Period 9-2
Printing reports 9-3
How to print a report 9-3

10 **Making copies 10-1**
Using the MFC as a copier 10-1
Enter Copy mode 10-1
Making a single copy 10-2
Making multiple copies 10-2
Out of Memory message 10-3
Using the Copy keys (Temporary settings) 10-4

Enlarge/Reduce 10-5
Quality (type of original document) 10-7
Contrast 10-8
Options 10-9
N in 1 copy (Page Layout) 10-10
Sorting copies 10-11
Changing the default copy settings 10-12
Quality 10-12
Contrast 10-12

11 **Important information 11-1**
IEC 60825 Specification 11-1
Laser Diode 11-1
Caution 11-1
For Finland and Sweden 11-2
For your safety 11-2
Disconnect device 11-2
IT power system (Norway only) 11-2
LAN connection 11-2
International ENERGY STAR® Compliance Statement 11-3
Radio interference (220-240V Model only) 11-3
Important safety instructions 11-4
Trademarks 11-6
Shipment of the MFC 11-6

12 **Troubleshooting and routine maintenance 12-1**
Troubleshooting 12-1
Error messages 12-1
Original document jams 12-4
Paper jams 12-5
If you are having difficulty with your MFC 12-11
Improving the print quality 12-15
Compatibility 12-18
Packing and shipping the MFC 12-19
Routine maintenance 12-22
Cleaning the scanner 12-22
Cleaning the printer 12-23
Cleaning the drum unit 12-24
Replacing the toner cartridge 12-25
How to replace the toner cartridge 12-26
Replacing the drum unit 12-30
Checking the drum life 12-33
Page Counter 12-33

13 **Optional accessories** **13-1**
Memory board..... 13-1
Installing the optional memory board..... 13-2
Network (LAN) board 13-4
Before starting installation 13-5
Step 1: Hardware installation..... 13-6
Step 2: Connecting the NC-9100h to an Unshielded Twisted Pair 10BASE-T or 100BASE-TX Ethernet Network 13-8
LED..... 13-9
Test switch..... 13-9
Paper Tray #2 13-10

G **Glossary** **G-1**

S **Specifications** **S-1**
Product description S-1
General S-1
Print media..... S-2
Copy S-2
Fax..... S-3
Scanner S-4
Printer S-5
Interfaces S-5
Computer requirements S-6
Consumable items S-7
Network (LAN) board (NC-9100h) S-8

I **Index** **I-1**

R **Remote Retrieval Access card** **R-1**

1 Introduction

Using this Guide

Thank you for buying a Brother Multi-Function Center (MFC). Your MFC-8220 is simple to use, with LCD screen instructions to guide you through programming it. You can make the most of your MFC by taking a few minutes to read this Guide.

Finding information

All the chapter headings and subheadings are listed in the Table of Contents. You will be able to find information about a specific feature or operation by checking the Index at the back of this Guide.

Symbols used in this Guide

Throughout this Guide you will see special symbols alerting you to important warnings, notes and actions. To make things clearer and to help you press the correct keys, we used special fonts and added some of the messages that will appear in the LCD.

Bold	Bold typeface identifies specific keys on the MFC control panel.
Italics	Italicized typeface emphasizes an important point or refers you to a related topic.
`Courier New`	Courier New typeface identifies the messages on the LCD of the MFC.

Warnings inform you what to do to avoid possible personal injury.

Cautions specify procedures you must follow or avoid to prevent possible damage to the machine.

Notes tell you how you should respond to a situation that may arise or give tips about how the current operation works with other features.

Improper Setup alerts you to devices and operations that are not compatible with the MFC.

MFC part names and operations

■ Front view

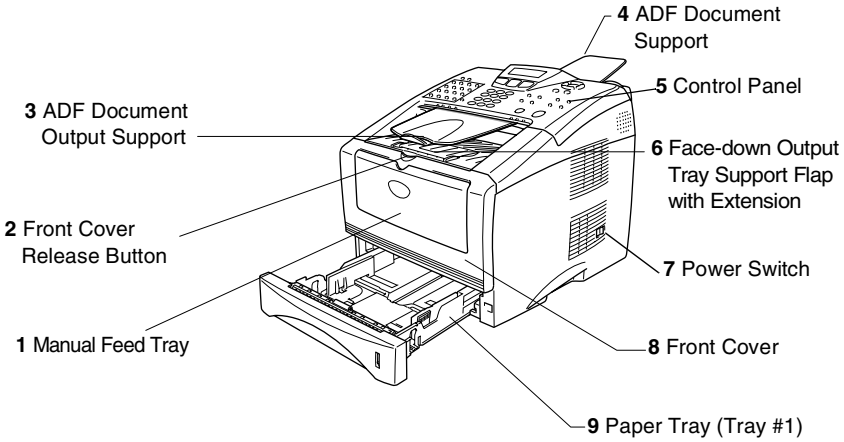

No.	Name	Description
1	Manual Feed Tray	Load paper here.
2	Front Cover Release Button	Press it to open the front cover.
3	ADF Document Output Support	The original documents come out here.
4	ADF Document Support	Place the original document here to use the ADF unit.
5	Control Panel	Use the keys and display to control the MFC.
6	Face-down Output Tray Support Flap with Extension (Support Flap)	Unfold it to prevent the printed paper from sliding off the MFC.
7	Power Switch	Switch the MFC on or off.
8	Front Cover	Open to install a toner cartridge or drum unit.
9	Paper Tray (Tray #1)	Load paper here.

Back view

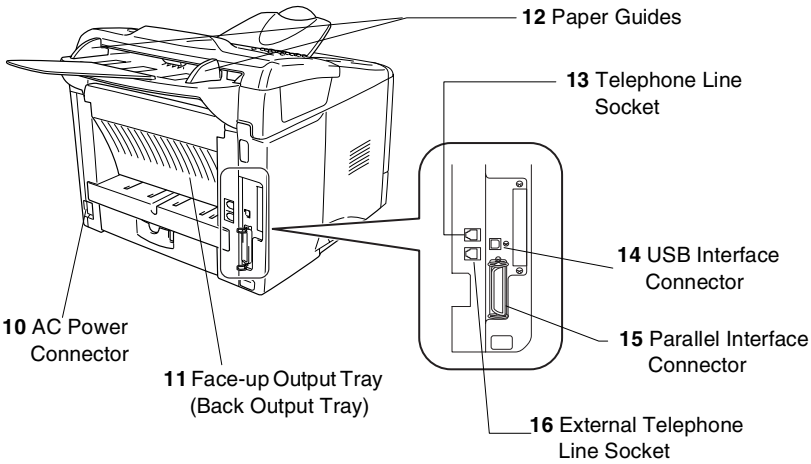

No.	Name	Description
10	AC Power Connector	Connect the AC Power Cable here.
11	Face-up Output Tray (Back Output Tray)	Open it when thicker paper is placed in the Manual feed tray.
12	Paper Guides	Use to fit the width of the document.
13	Telephone Line Socket	Plug the line cord supplied with the MFC into here.
14	USB Interface Connector	Connect the USB Cable here.
15	Parallel Interface Connector	Connect the Parallel Cable here.
16	External Telephone Line Socket (Not for the UK)	Plug in the external telephone line here.

Control panel overview

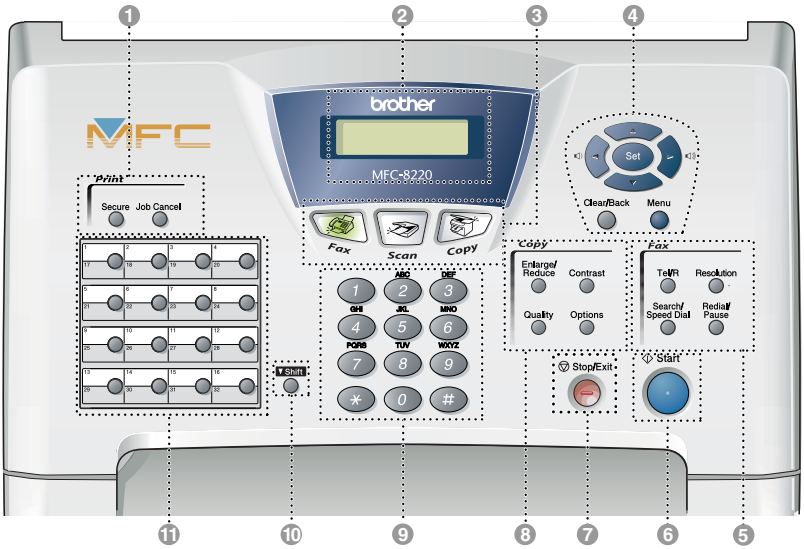

1 **Print keys:**

Secure

Lets you print out data saved in memory by entering your four-digit password.

Job Cancel

Clears data from the printer memory.

2 **Liquid Crystal Display (LCD)**

Displays messages on the screen to help you to set up and use your MFC. The LCD will change color depending on the MFC status.

3 **Mode keys:**

Fax

Lets you access Fax mode.

Copy

Lets you access Copy mode.

Scan

Lets you access Scan mode.

(See Software User's Guide on the CD-ROM.)

4 **Navigation keys:**

Menu

Lets you access the Menu to program.

Set

Lets you store your settings in the MFC.

Clear/Back

Deletes entered data or lets you exit the menu by pressing repeatedly.

or

Press to scroll forward or backward to a menu selection.

When using the speaker or ring, you can press these keys to adjust the volume in fax mode.

or

Press to scroll through the menus and options.

Also, you can use these keys to do a numerical search for the names of stored numbers in fax mode.

5 **Fax and telephone keys:**

Tel/R

This key is used to have a telephone conversation having picked up the external handset in F/T pseudo-ringing etc. Also, use this key to gain access to an outside line and/or to recall the operator or transfer a call to another extension when it is connected to a PABX.

Resolution

Sets the resolution when you send a fax.

Search/Speed Dial

Lets you look up numbers that are stored in the dialling memory. It also lets you dial stored numbers by pressing **#** and a three-digit number.

Redial/Pause

Redials the last number you called. It also inserts a pause in auto dial numbers.

6 Start **Start**

Lets you start sending faxes, making copies or scanning.

7 Stop/Exit **Stop/Exit**

Stops a fax, copy and scan operation or exits from the menu.

8 **Copy keys (Temporary settings):**

Enlarge/Reduce

Lets you reduce or enlarge copies depending upon the ratio you select.

Contrast

Lets you make a copy that is lighter or darker than the original document.

Quality

Lets you select the copy quality for your type of original document.

Options

You can quickly and easily select temporary settings for copying.

9 **Dial Pad**

Use these keys to dial telephone or fax numbers and as a keyboard for entering information into the MFC.

The **#** key lets you temporarily switch the dialling mode during a telephone call from Pulse to Tone.

10 **Shift**

To access memory locations 17 through 32 in the One-Touch keys hold down the Shift key.

11 **One-Touch keys**

These 16 keys give you instant access to 32 previously stored dial numbers.

Back light color shows the MFC status

The LCD back light will change color depending on the MFC status.

LCD	MFC status	Description
Off	Sleep Mode	The power switch is off or the MFC is in Sleep mode.
Orange	Initializing	The MFC is being initialized after you switched it on.
	Warning Up in Sleep mode	The MFC is warning up for printing in Sleep mode.
	Menu in Operation	The Menu is in use.
	Receiving Data from the Computer	The MFC is either receiving data from the computer, processing data in the memory, or printing data.
	Data Remaining in Printer Memory	Print data remains in the MFC memory.
Green	Warming Up	The MFC is warming up for printing.
	Ready	The MFC is ready for use.
	Receiving Fax Data	The MFC is either receiving fax data, processing data in memory, or printing data.

LCD	MFC status	Description
Red	Service error	Follow the steps below. 1. Turn off the power switch. 2. Wait a few seconds, and then turn it back on and try to print again. If you cannot clear the error and still see the Red back light after turning the MFC back on, please call your Brother dealer or Brother authorized service center.
	Cover open	The cover is open. Close the cover. (See *Error messages* on page 12-1.)
	Toner empty	Replace the toner cartridge with a new one. (See *Replacing the toner cartridge* on page 12-25.)
	Paper error	Put paper in the tray or clear the paper jam. Check the LCD message. (See *Troubleshooting* on page 12-1.)
	Out of memory	Memory is full. (See *Error messages* on page 12-1.)
	Other errors	Check the LCD message. (See *Troubleshooting* on page 12-1.)

About fax machines

Fax tones and handshake

When someone is sending a fax, the MFC sends fax calling tones (CNG tones). These are quiet, intermittent beeps every 4-seconds. You will hear them after you dial and press **Start** and they will continue for about 60 seconds after dialling. During that time, the sending machine must begin the “handshake”, or connection, with the receiving machine.

Each time you use automatic procedures to send a fax, you are sending CNG tones over the phone line. You will soon learn to listen for these quiet beeps each time you answer a phone on your fax line, so you will know if you are receiving a fax message.

The receiving fax responds with fax receiving tones, which are loud, chirping sounds. A receiving fax chirps for about 40 seconds over the phone line, and the LCD shows `Receiving`.

If your MFC is set to the `Fax Only` mode, it will answer every call automatically with fax receiving tones. If the other person hangs up, your MFC will continue to send the “chirps” for about 40 seconds, and the LCD continues to show `Receiving`. To cancel receiving, press **Stop/Exit**.

The fax ‘handshake’ is the time in which the sending machine’s CNG tones and the receiving machines “chirps” overlap. This must be for at least 2 to 4 seconds, so both machines can understand how each is sending and receiving the fax. The handshake cannot begin until the call is answered, and the CNG tones only last for about 60 seconds after the number is dialled. So it is important for the receiving machine to answer the call in as few rings as possible.

When you have an external Telephone Answering Device (TAD) on your fax line, your TAD will decide the number of rings before the call is answered.
Pay special attention to the directions for connecting a TAD in this chapter. (See *Connecting an external telephone answering device (TAD)* on page 1-11.)

ECM (Error Correction Mode)

The Error Correction Mode (ECM) is a way for the MFC to check a fax transmission while it is in progress. If the MFC detects errors during fax transmission, it resends the pages of the fax that had an error. ECM transmissions are only possible between fax machines that both have this feature. If they do, you may send and receive fax messages that are continuously being checked by the MFC.

Your MFC must have enough memory for this feature to work.

Connecting the MFC

Connecting an external telephone

Although your MFC does not have a handset, you can connect a separate telephone (or telephone answering device) directly to your MFC as shown in the diagram below.

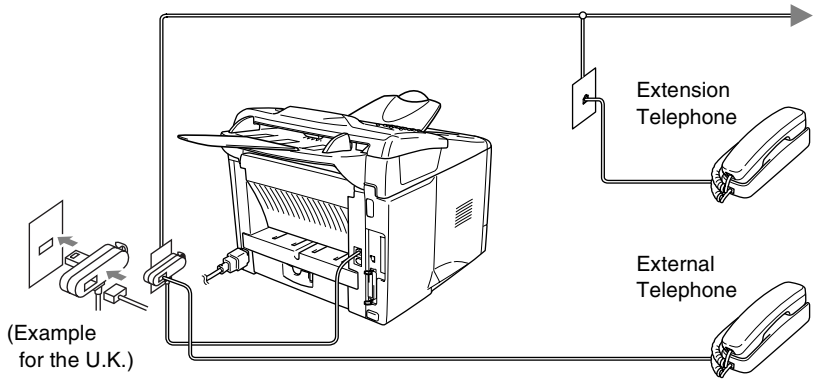

Whenever this phone (or TAD) is in use, the LCD shows `Telephone`.

Connecting an external telephone answering device (TAD)

Sequence

You may choose to connect an answering device. However, when you have an **external** TAD on the same telephone line as the MFC, the TAD answers all calls and the MFC “listens” for fax calling (CNG) tones. If it hears them, the MFC takes over the call and receives the fax. If it does not hear CNG tones, the MFC lets the TAD continue playing your outgoing message so your caller can leave you a voice message.

The TAD must answer within four rings (the recommended setting is two rings). The MFC cannot hear CNG tones until the TAD has answered the call, and with four rings there are only 8 to 10 seconds of CNG tones left for the fax “handshake”. Make sure you carefully follow the instructions in this guide for recording your outgoing message. We do not recommend using the toll saver feature on your external answering machine if it exceeds five rings.

If you do not receive all your faxes, reduce the Ring Delay setting on your external TAD.

Do not connect a TAD elsewhere on the same phone line.

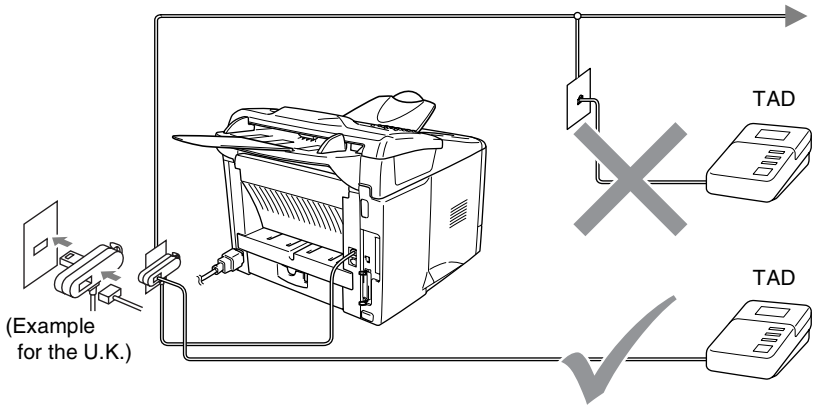

Connections

The external TAD must be connected as shown above.

1. Set your external TAD to one or two rings. (The MFC's Ring Delay setting does not apply.)
2. Record the outgoing message on your external TAD.
3. Set the TAD to answer calls.
4. Set the Receive Mode to `External TAD`.
   (See *Choosing the Receive Mode* on page 5-1.)

Recording outgoing message (OGM) on an external TAD

Timing is important in recording this message. The message sets up the ways to handle both manual and automatic fax reception.

1. Record 5 seconds of silence at the beginning of your message. (This allows your MFC time to listen for the fax CNG tones of automatic transmissions before they stop.)
2. Limit your speaking to 20 seconds.
3. End your 20-second message by giving your Remote Activation Code for people sending manual faxes. For example: *"After the beep, leave a message or send a fax by pressing* ***✳ 51*** *and Start."*

We recommend beginning your OGM with an initial 5-second silence because the MFC cannot hear fax tones over a resonant or loud voice. You may try omitting this pause, but if your MFC has trouble receiving, then you must rerecord the OGM to include it.

Using extension telephones (U.K. only)

It may be that your premises are already wired with parallel extension telephones, or you intend to add extension telephones to your line, in addition to your machine. While the simplest arrangement is straightforward parallel connection, there are some reasons as to why this arrangement will cause unsatisfactory service, the most obvious of which is inadvertent interruption of a facsimile transmission by someone picking up an extension telephone in order to make an outgoing call. Additionally, remote activation may not operate reliably in such a simple configuration.

This machine may also be set to make a delayed transmission (i.e. a transmission at a pre-set time). This pre-set job may coincide with someone picking up an extension handset.

Such problems can easily be eliminated however, if you arrange modification of your extension wiring circuit, such that extension devices are connected “downstream” of your machine, in a master/slave configuration. In such a configuration, this machine can always detect whether a telephone is in use, thus it will not attempt to seize the line during that time. This is known as “telephone off-hook detection.”

The inadvisable configuration is shown in figure 1 on the next page, and the recommended master/slave configuration is shown in figure 2.

This new connection configuration can be arranged by contacting BT, Kingston upon Hull Telecommunications, your PABX maintainer or a qualified telephone installation company as appropriate. Simply explained, the extension telephone circuit should be terminated on a normal modular plug (BT 431A style), which in turn should be inserted into the modular socket of the white “T”-shaped connector provided as part of the line cord assembly.

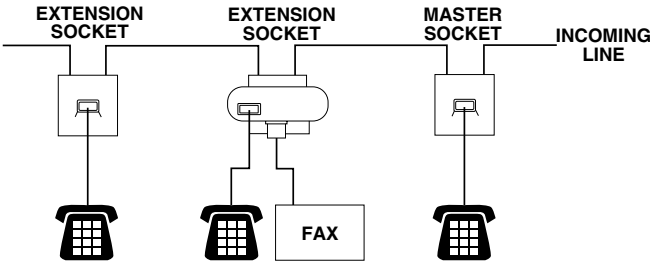

INADVISABLE CONNECTION OF EXTENSION SOCKETS
Fig. 1.

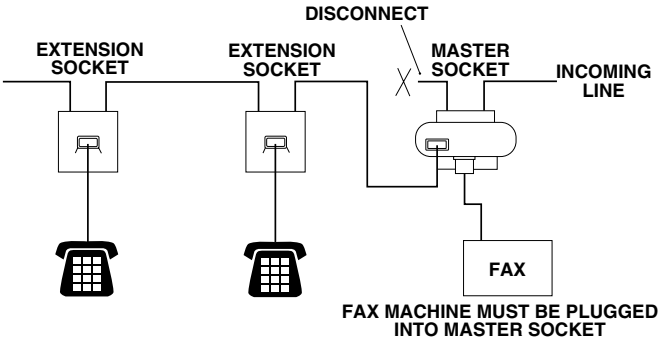

RECOMMENDED CONNECTION OF EXTENSION SOCKETS
Fig. 2.

Multi-line connections (PBX)

Most offices use a central telephone system. While it is often relatively simple to connect the MFC to a key system or a PBX (Private Branch Exchange), we suggest that you contact the company that installed your telephone system and ask them to connect the MFC for you. It is advisable to have a separate line for the MFC.

If the MFC is to be connected to a multi-line system, ask your installer to connect the unit to the last line on the system. This prevents the unit from being activated each time a telephone call is received.

As with all fax units, this MFC must be connected to a two wire system. If your line has more than two wires, proper connection of the MFC cannot be made.

If you are installing the MFC to work with a PBX

1. It is not guaranteed that the unit will operate correctly under all circumstances with a PBX. Any cases of difficulty should be reported first to the company that handles your PBX.
2. If all incoming calls will be answered by a switchboard operator, it is recommended that the Receive Mode be set to `Manual`. All incoming calls should initially be regarded as telephone calls.

If you are installing the MFC to work with a PBX you need to set `Phone Line Set` to `PBX` (**Menu**, **0**, **4**).

Custom features on your phone line

If you have Voice Mail, Call Waiting, Call Waiting/Caller ID, Caller ID, RingMaster, an answering service, an alarm system or other custom feature on one phone line it may create a problem with the operation of your MFC. (See *If you are having difficulty with your MFC* on page 12-11.)

2 Loading paper and original documents

About paper

Paper specifications for each paper tray

	Manual feed tray	Paper tray	Optional Lower tray
Paper types	Plain paper, Bond paper, Recycled paper, Envelope, Labels, and Transparency	Plain paper, Recycled paper, and Transparency*	Plain paper, Recycled paper, and Transparency*
Paper weights	60 to 161 g/m^2	60 to 105 g/m^2	60 to 105 g/m^2
Paper sizes	Width: 69.8 to 220 mm Height: 116 to 406.4 mm	A4, Letter, Legal, B5 (ISO), Executive, A5, A6, B6 (ISO)	A4, Letter, Legal, B5 (ISO), Executive, A5, B6 (ISO)
Number of sheets	Single Sheet	250 sheets (80 g/m^2)	250 sheets (80 g/m^2)

* Up to 10 sheets

When printing transparencies, remove each one from the face-down output tray after it exits the MFC.

Recommended paper

Plain Paper:	Xerox Premier 80 g/m^2
	Xerox Business 80 g/m^2
	Mode DATACOPY 80 g/m^2
	IGEPA X-Press 80 g/m^2
Recycled paper:	Xerox Recycled Supreme
Transparency:	3M CG 3300
Labels:	Avery laser label L7163

- Before you buy a large amount of paper, please test some to make sure that the paper is suitable.
- Use paper that is made for plain-paper copying.
- Use paper that is 75 to 90 g/m^2.
- Use neutral paper. Do not use acidic or alkaline paper.
- Use long-grain paper.
- Use paper with a moisture content of approximately 5%.

Caution

Do not use ink jet paper. It may cause a paper jam and damage your MFC.

The output quality depends on the paper type and paper brand. Visit us at http://solutions.brother.com and check the latest recommendations for paper that can be used with the MFC-8220.

Choosing acceptable paper

We recommend that you test paper (especially special sizes and types of paper) on the MFC before purchasing large quantities.

- Avoid feeding label sheets that are partly used or your MFC will be damaged.
- Avoid using coated paper, such as vinyl coated paper.
- Avoid using preprinted or highly textured paper, or paper with an embossed letterhead.

For optimum printing, use a recommended type of paper, especially for plain paper and transparencies. For more information on paper specifications, call your nearest authorized sales representative or the place where you purchased your MFC.

- Use label or transparencies that are designed for use in *laser* printers.
- For the best print quality, we recommend using long-grained paper.
- If you are using special paper and the paper has problems feeding from the paper tray, try again using the manual feed tray.
- You can use recycled paper in this MFC.

How to load paper

To load paper or other media in the paper tray

1 Pull the paper tray completely out of the MFC.

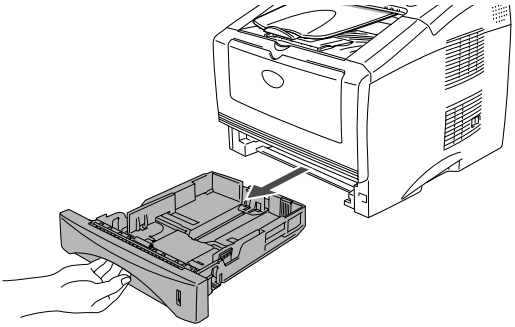

2 While pressing the paper guide release lever, slide the adjusters to fit the paper size.

Check that the guides are firmly in the slots.

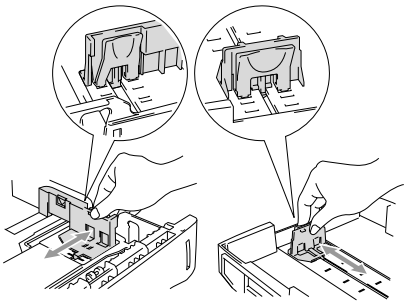

For Legal size paper, press the universal guide release button and pull out the back of the paper tray.

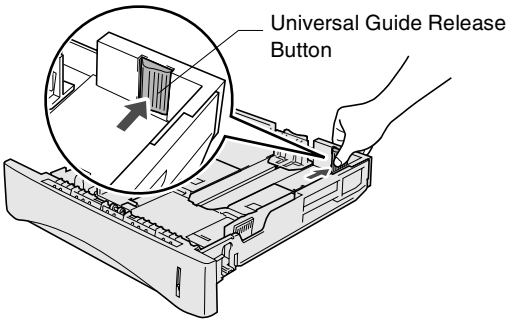

3 Fan the stack of paper well to avoid paper jams and misfeeds.

4 Put paper in the paper tray.

Check that the paper is flat in the tray, below the maximum paper mark, and that the paper guide is flush against the paper stack.

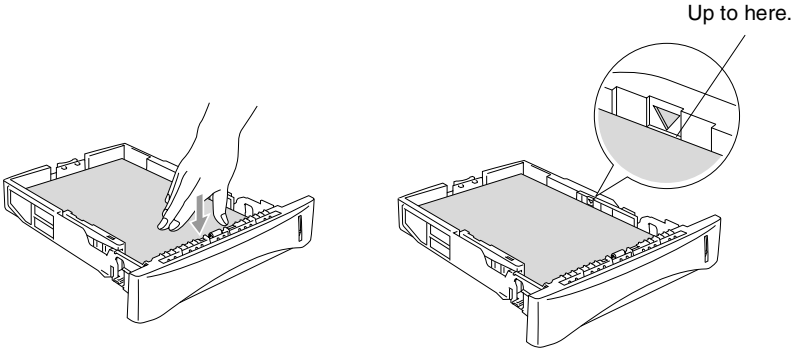

5 Put the paper tray firmly back in the MFC and unfold the support flap before you use the MFC.

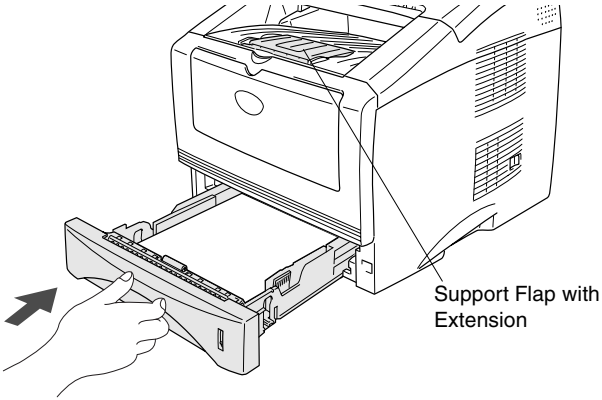

When you put paper in the paper tray, please remember the following:

- The side to be printed on must be face down.
- Put the leading edge (top of the paper) in first and push it gently into the tray.
- To copy or receive faxes on Legal size paper, unfold the support flap extension.

To load paper or other media in the manual feed tray

When printing envelopes and labels you should only use the manual feed tray.

1 Open the manual feed tray. Slide the paper guides to fit the paper size.

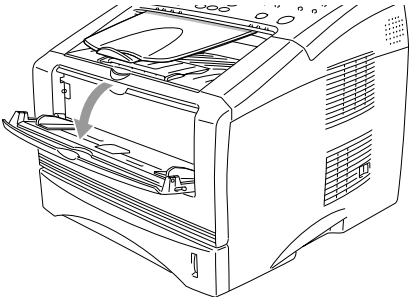

2 Using both hands put paper in the manual feed tray until the front edge of the paper touches the paper feed roller. Hold the paper in this position until the MFC automatically feeds the paper in for a short distance, and then let go off the paper.

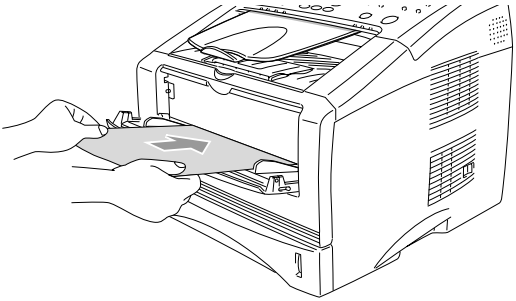

When you put paper in the manual feed tray, please remember the following:

- The side to be printed on must be face up.
- Put the leading edge (top of the paper) in first and push it gently into the tray.
- Make sure that the paper is straight and in the proper position on the manual feed tray. If it is not, the paper may not be fed properly, resulting in a skewed printout or a paper jam.
- Do not put more than one sheet of paper or envelope in the manual feed tray at any one time, or it may cause a jam.

Using the automatic document feeder (ADF)

You can send faxes, copy and scan from the ADF (automatic document feeder).

- Make sure original documents written with ink are completely dry.
- The original documents to be faxed must be from 148 to 216 mm wide and 100 to 356 mm long.
- Make sure you place the original documents **face down**, **top edge first**.
- Adjust the paper guides to fit the width of your original documents.

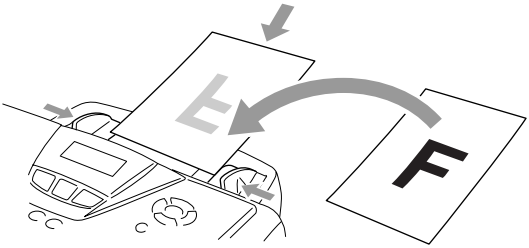

- The ADF can hold up to 30 pages and feeds each sheet individually. Use standard (75 g/m^2) paper.
- Always fan the original documents before putting them in the ADF, and then stagger the pages in the ADF as shown:

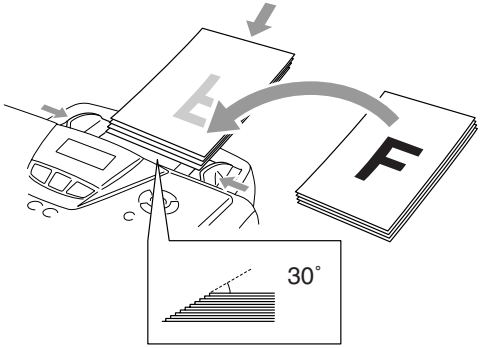

DO NOT use paper that is curled, wrinkled, folded, ripped, stapled, paper clipped, pasted or taped. **DO NOT** use cardboard, newspaper or fabric.

DO NOT pull on the original document while it is in progress.

3 On-screen programming

User-friendly programming

Your MFC is designed to be easy to use with LCD on-screen programming using the navigation keys. User-friendly programming helps you take full advantage of all the menu selections your MFC has to offer.

Since your programming is done on the LCD, we have created step-by-step on-screen instructions to help you program your MFC. All you need to do is follow the instructions as they guide you through the menu selections and programming options.

Menu table

You can probably program your MFC without the User's Guide. But to help you understand the menu selections and options that are found in the MFC programs, use the Menu table on page 3-4.

You can program your MFC by pressing **Menu** followed by the menu numbers.
For example to set `Fax Resolution` to `Fine`:
Press **Menu**, **2**, **2**, **2** and ▲ or ▼ to select `Fine`.
Press **Set**.

Memory Storage

If there is a power failure, you will not lose your menu settings because they are stored permanently. Temporary settings (such as Overseas Mode, and so on) will be lost. You may also have to reset the date and time.

Navigation keys

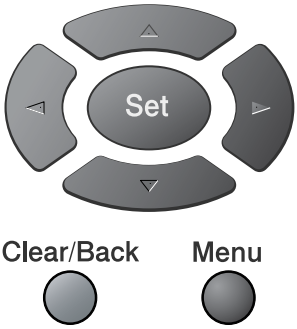

* Access the menu
* Go to the next menu level
* Accept an option
* Exit the menu by pressing repeatedly
* Go back to the previous menu level
* Scroll through the current menu level
* Go back to the previous menu level
* Go forward to the next menu level
* Exit the menu

You can access the menu mode by pressing **Menu**.
When you enter the menu, the LCD scrolls.

Press **1** for General Setup menu

```
Select ▲▼ & Set
1.General Setup
```

—**OR**—

Press **2** for Fax menu

```
Select ▲▼ & Set
2.Fax
```

—**OR**—

Press **3** for Copy menu

```
Select ▲▼ & Set
3.Copy
```

—**OR**—

Press **4** for Printer menu

```
Select ▲▼ & Set
4.Printer
```

—**OR**—

Press **5** for Print Reports menu

```
Select ▲▼ & Set
5.Print Reports
```

—**OR**—

Press **6** for LAN menu
(Only if the optional LAN board (NC-9100h) is installed.)

```
Select ▲▼ & Set
6.LAN
```

—**OR**—

Press **0** for Initial Setup menu

```
Select ▲▼ & Set
0.Initial Setup
```

—**OR**—

You can scroll more quickly through each menu level by pressing the arrow for the direction you want: ▲ or ▼.

Then set an option by pressing **Set** when that option appears on the LCD.

The LCD will then show the next menu level.

Press ▲ or ▼ to scroll to your next menu selection.

Press **Set**.

When you finish setting an option, the LCD shows `Accepted`.

Use ▲ to scroll backward if you passed your choices or want to save keystrokes.
The current setting is always the option with "*".

To access the menu, press Menu **Menu**.

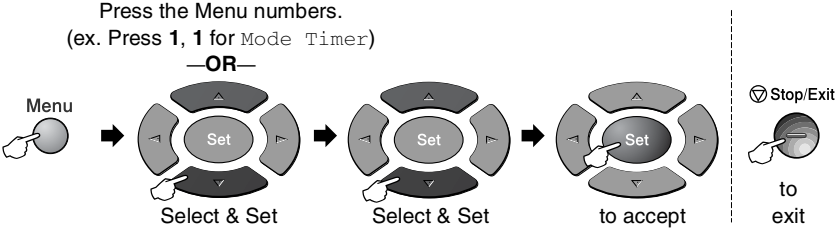

Main Menu	Submenu	Menu Selections	Options	Descriptions	Page
1.General Setup	1.Mode Timer	—	0 Sec **30 Secs**✳ 1 Min 2 Mins 5 Mins Off	Sets how long the MFC will stay in Copy or Scan mode before returning to Fax mode.	4-6
	2.Paper Type	— (Without the optional tray #2) **1.Tray #1** (With the optional tray #2)	Thin **Plain**✳ Thick Thicker Transparency	Sets the type of paper in paper tray#1.	4-6
		2.Tray #2 (With the optional tray #2)	Thin **Plain**✳ Thick Thicker Transparency	Sets the type of paper in paper tray#2.	4-6
	3.Paper Size	— (Without the optional tray #2) **1.Tray #1** (With the optional tray #2)	**A4**✳ Letter Legal Executive A5 A6 B5 B6	Sets the size of paper in paper tray#1.	4-7
		2.Tray #2 (With the optional tray #2)	**A4**✳ Letter Legal Executive A5 B5 B6	Sets the size of paper in paper tray#2.	4-7

The factory settings are shown in Bold with "✳".

To access the menu, press Menu **Menu**.

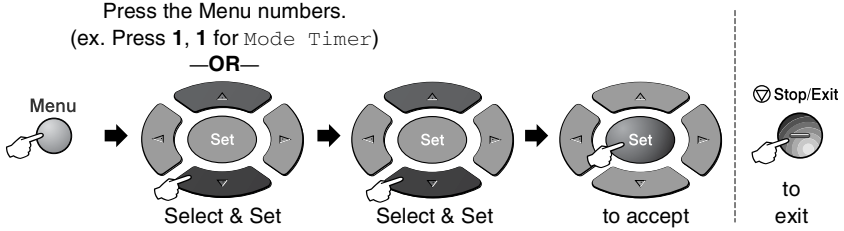

Main Menu	Submenu	Menu Selections	Options	Descriptions	Page
1.General Setup (Continued)	4.Volume	1.Ring	High **Med** ✳ Low Off	Adjusts the ring volume.	4-8
		2.Beeper	High **Med** ✳ Low Off	Adjusts the volume level of the beeper.	4-8
		3.Speaker	High **Med** ✳ Low Off	Adjusts the speaker volume.	4-9
	5.Auto Daylight	—	**On** ✳ Off	Change for Daylight Savings Time automatically.	4-9
	6.Ecology	1.Toner Save	On **Off** ✳	Increases the life of the toner cartridge.	4-9
		2.Sleep Time		Conserves power.	4-10
		3.Power Save	On **Off** ✳	Power Save Mode.	4-11
	7.LCD Contrast	—	- □□■ + - □■□ + ✳ - ■□□ +	Adjusts the contrast of the LCD.	4-11

The factory settings are shown in Bold with "✳".

To access the menu, press Menu **Menu**.

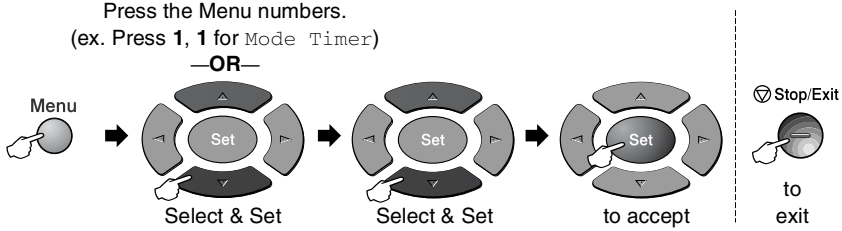

Main Menu	Submenu	Menu Selections	Options	Descriptions	Page
1.General Setup (Continued)	8.Tray Use:Copy (This setting only appears if you have the optional tray #2)	—	Tray#1 Only Tray#2 Only **Auto**✳	Selects the tray that will be used for Copy mode.	4-12
	9.Tray Use:Fax (This setting only appears if you have the optional tray #2)	—	Tray#1 Only Tray#2 Only **Auto**✳	Selects the tray that will be used for Fax mode.	4-13
2.Fax	1.Setup Receive (In Fax mode only)	1.Ring Delay	00-04(**02**✳) (UK only) 00-05(**02**✳) (Nordic countries only)	Sets the number of rings before the MFC answers in Fax Only or Fax/Tel mode.	5-3
		2.F/T Ring Time	70 40 **30**✳ 20	Sets the pseudo/double-ring time in Fax/Tel mode.	5-4
		3.Fax Detect	**On**✳ Off	Receives fax messages without pressing the **Start** key.	5-5
		4.Remote Code	On (✳51, #51) **Off**✳	You can answer all calls at an extension or external phone and use codes to turn the MFC on or off. You can personalize these codes.	5-10

The factory settings are shown in Bold with "✳".

To access the menu, press Menu **Menu**.

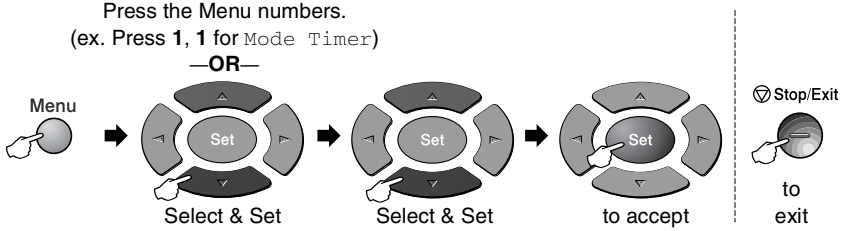

Main Menu	Submenu	Menu Selections	Options	Descriptions	Page
2.Fax (Continued)	1.Setup Receive (In Fax mode only) (Continued)	5.Auto Reduction (If you have the optional tray #2, see page 3-16.)	**On** ✳ Off	Reduces the size of incoming faxes.	5-6
		6.Memory Receive	**On** ✳ Off	Automatically stores any incoming faxes in its memory if it runs out of paper.	5-7
		7.Print Density	- □□□□■ + - □□□■□ + - □□■□□ + ✳ - □■□□□ + - ■□□□□ +	Makes printouts darker or lighter.	5-8
		8.Polling RX	**Standard** ✳ Secure Timer	Sets up your MFC to poll another fax machine.	5-11
	2.Setup Send (In Fax mode only)	1.Contrast	**Auto** ✳ Light Dark	Changes the lightness or darkness of faxes you send.	6-5
		2.Fax Resolution	**Standard** ✳ Fine S.Fine Photo	Sets the default resolution for outgoing faxes.	6-6
		3.Delayed Fax	—	Set the time of day in 24 hour format that the delayed faxes will be sent.	6-17

The factory settings are shown in Bold with "✳".

To access the menu, press Menu **Menu**.

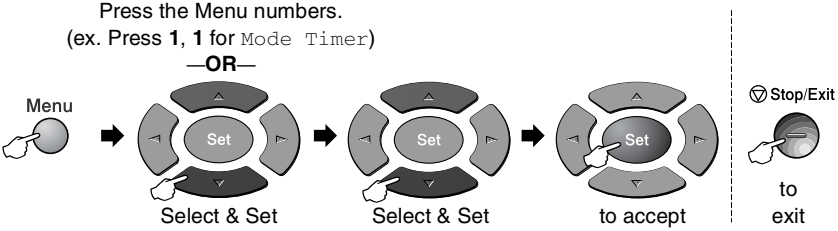

Main Menu	Submenu	Menu Selections	Options	Descriptions	Page
2.Fax (Continued)	2.Setup Send (Continued) (In Fax mode only)	4.Batch TX	On **Off**✳	Combines delayed faxes to the same fax number at the same time of day into one transmission.	6-18
		5.Real Time TX	**Off**✳ On Next Fax Only	You can send a fax without using the memory.	6-8
		6.Polled TX	**Standard**✳ Secure	Sets up the original document on your MFC to be retrieved by another fax machine.	6-18
		7.Coverpg Setup	Next Fax Only On **Off**✳ Print Sample	Automatically sends a Cover Page you have programmed.	6-10
		8.Coverpage Note	—	You can set up your own comments for fax Cover Page.	6-11
		9.Overseas Mode	On **Off**✳	Adjusts for overseas transmissions, which can sometimes cause problems.	6-16
	3.Set Quick-Dial	1.One-Touch Dial		Stores One-Touch Dial numbers, so you can dial by pressing one key (and Start).	7-1
		2.Speed-Dial	—	Stores Speed-Dial numbers, so you can dial by pressing only a few keys (and **Start**).	7-3

The factory settings are shown in Bold with "✳".

To access the menu, press Menu **Menu**.

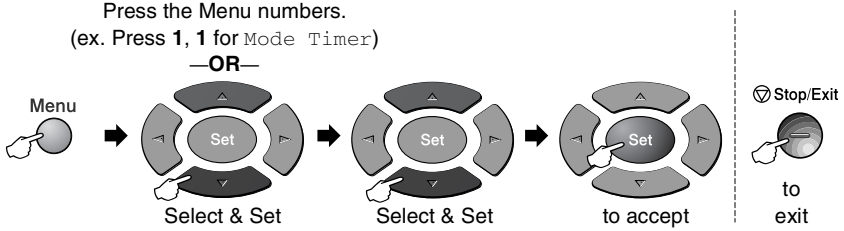

Main Menu	Submenu	Menu Selections	Options	Descriptions	Page
2.Fax (Continued)	3.Set Quick-Dial (continued)	3.Setup Groups	—	Sets up a Group number for Broadcasting.	7-5
	4.Report Setting	1.XMIT Report	On **On+Image** ✳ Off Off+Image	Initial setup for Transmission Verification Report and Journal Period.	9-1
		2.Journal Period	Every 7 Days Every 2 Days Every 24 Hours Every 12 Hours Every 6 Hours **Every 50 Faxes** ✳ Off		9-2
	5.Remote Fax Opt	1.Forward/Store	**Off** ✳ Fax Forward Fax Storage	Sets the MFC to forward fax messages or to store incoming faxes in the memory so you can retrieve them while you are away from your MFC.	8-1
		2.Remote Access	--- ✳	You must set your own code for Remote Retrieval.	8-3
		3.Print Document	—	Prints incoming faxes stored in the memory.	5-8
	6.Remaining Jobs	—	—	Checks which jobs are in the memory or cancels a delayed fax or polling job.	6-9

The factory settings are shown in Bold with "✳".

To access the menu, press Menu **Menu**.

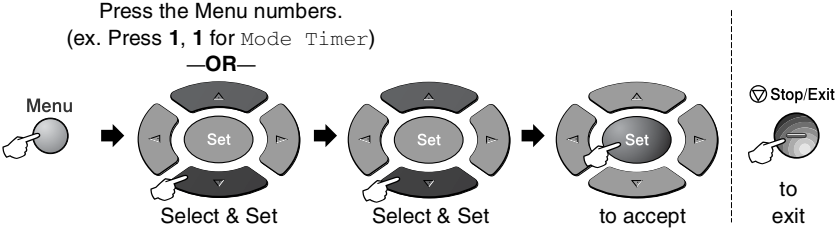

Main Menu	Submenu	Menu Selections	Options	Descriptions	Page
2.Fax (Continued)	0.Miscellaneous	1.Mem Security	—	Prohibits most functions except receiving faxes into memory.	6-20
		2.Compatibility	**High**✳ Normal Basic	Adjusts for transmissions which can cause problems.	12-18
		3.Drum Life	—	You can check the percentage of drum life that remains available.	12-33
		4.Page Counter	Total Copy Print List/Fax	Let you check the number of total pages the MFC has printed so far.	12-33
		5.BT Call Sign (U.K. Only)	On **Off**✳	Use with BT Call Sign.	5-14
		5.Distinctive (Denmark Only)	—	—	See Danish User's Guide included on the CD-ROM.

The factory settings are shown in Bold with "✳".

To access the menu, press Menu **Menu**.

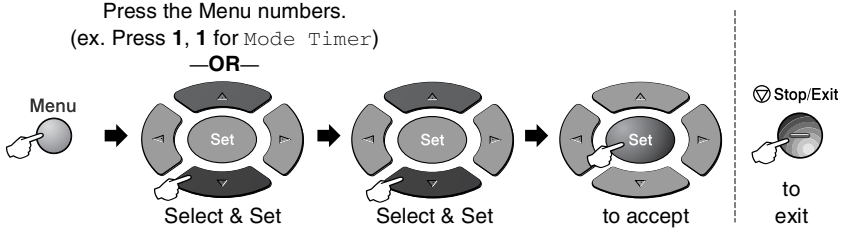

Main Menu	Submenu	Menu Selections	Options	Descriptions	Page
3.Copy	1.Quality	—	Text Photo **Auto** ✳	Selects the Copy resolution for your type of original document.	10-12
	2.Contrast	—	- □□□□■ + - □□□■□ + - □□■□□ + ✳ - □■□□□ + - ■□□□□ +	Adjusts the contrast for copies.	10-12
4.Printer	1.Emulation	—	**Auto** ✳ HP LaserJet BR-Script 3	Selects the Emulation mode.	1-12*1
	2.Print Options	1.Internal Font	—	Prints a list of the MFC's internal fonts or current printer settings.	1-13*1
		2.Configuration	—		1-13*1
	3.Reset Printer	—	—	Returns the MFC to the default settings.	1-13*1
5.Print Reports	1.Help List	—	—	You can print these lists and reports.	9-3
	2.Quick-Dial	—	—		
	3.Journal	—	—		
	4.XMIT Verify	—	—		
	5.System Setup	—	—		
	6.Order Form	—	—		

- The factory settings are shown in Bold with "✳".
- *1 See the Software User's Guide on the CD-ROM.

To access the menu, press Menu **Menu**.

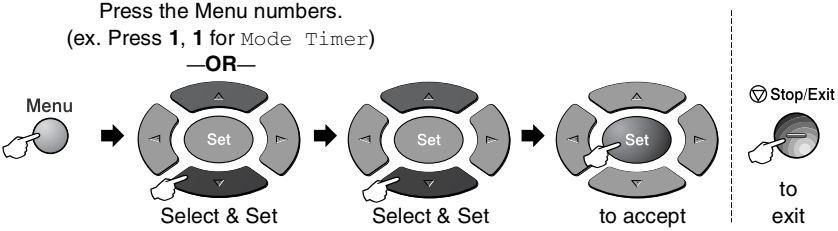

Main Menu	Submenu	Menu Selections	Options	Descriptions	Page
0.Initial Setup	1.Receive Mode	—	**Fax Only**✳ Fax/Tel External TAD Manual	You can choose the receive mode that best suits your needs.	5-1 5-2
	2.Date/Time	—	—	Puts the date and time on the LCD and in headings of faxes you send.	4-1
	3.Station ID	—	Fax Tel Name	Program your name and fax number to appear on each page you fax.	4-2 4-3
	4.Phone Line Set	—	**Normal**✳ ISDN PBX	Selects the phone line type.	4-5
	5.Tone/Pulse (Excluding the Nordic countries)	—	**Tone**✳ Pulse	Selects the dialling mode.	4-13
	0.Local Language (Czech and Hungarian only)	—	Czech Hungarian English	Allows you to change the LCD Language for your country.	See Quick Setup Guide
	0.Local Language (Norwegian, Swedish, Danish and Finnish only)	—	Norwegian Swedish Danish Finnish English	Allows you to change the LCD Language for your country.	See Quick Setup Guide

- The factory settings are shown in Bold with "✳".
- 0.Local Language menu is not available on UK machine.

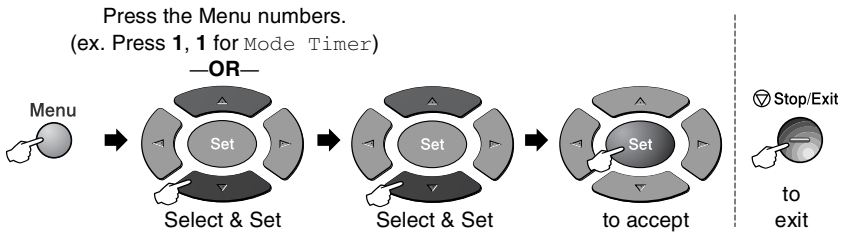

If you installed optional LAN board (NC-9100h), the LCD shows the following LAN menu.

Main Menu	Submenu	Menu Selections	Options	Descriptions	Page
6.LAN (option)	1.Setup TCP/IP	1.BOOT Method	**Auto** ✳ Static RARP BOOTP DHCP	You can choose the BOOT method that best suits your needs.	See Network User's Guide on the CD-ROM.
		2.IP Address	[000-255]. [000-255]. [000-255]. [000-255]	Enter the IP address.	
		3.Subnet Mask	[000-255]. [000-255]. [000-255]. [000-255]	Enter the Subnet mask.	
		4.Gateway	[000-255]. [000-255]. [000-255]. [000-255]	Enter the Gateway address.	
		5.Host Name	BRN_XXXXXX	Enter the Host name.	
		6.WINS Config	**Auto** ✳ Static	You can choose the WINS configuration mode.	
		7.WINS Server	**Primary** ✳ Secondary	Specifies the IP address of the primary or secondary server.	

The factory settings are shown in Bold with "✳".

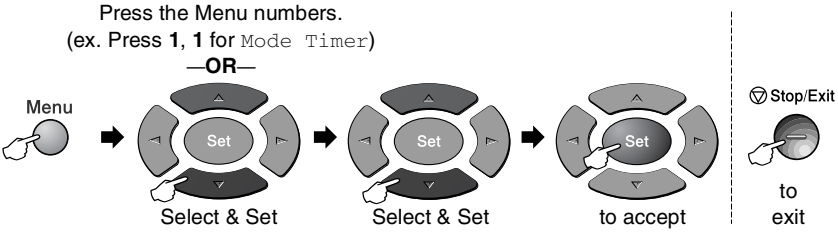

Main Menu	Submenu	Menu Selections	Options	Descriptions	Page
6.LAN (option) (Continued)	1.Setup TCP/IP (Continued)	8.DNS Server	**Primary**✳ Secondary	Specifies the IP address of the primary or secondary server.	See Network User's Guide on the CD-ROM.
		9.APIPA	**On**✳ Off	Automatically allocates the IP address from the link-local address range.	
	2.Setup Internet	1.Mail Address	(60 characters)	Enter the mail address.	
		2.SMTP Server	[000-255]. [000-255]. [000-255]. [000-255]	Enter the SMTP server address.	
		3.POP3 Server	[000-255]. [000-255]. [000-255]. [000-255]	Enter the POP3 server address.	
		4.Mailbox Name	(up to 20 characters)	Enter the mail box name.	
		5.Mailbox Pwd	Password:******	Enter the password to login to the POP3 server.	

The factory settings are shown in Bold with "✳".

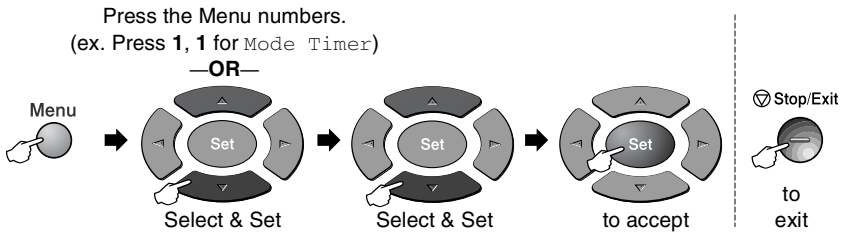

Main Menu	Submenu	Menu Selections	Options	Descriptions	Page
6.LAN (option) (Continued)	3.Setup Mail RX	1.Auto Polling	**On** ✳ Off	Automatically checks the POP3 server for new messages.	See Network User's Guide on the CD-ROM.
		2.Poll Frequency	**10Min** (01-60)	Sets the interval for checking for new messages on the POP3 server.	
		3.Header	All Subject+From+To **None** ✳	Selects the contents of the mail header to be printed.	
		4.Del Error Mail	**On** ✳ Off	Deletes error mails automatically.	
		5.Notification	On MDN **Off** ✳	Sends notification messages.	
	4.Setup Mail TX	1.Sender Subject	—	Displays the subject that is attached to the Internet Fax data.	
		2.Size Limit	On **Off** ✳	Limits the size of E-mail original documents.	
		3.Notification	On **Off** ✳	Sends notification messages.	
	5.Setup Relay	1.Rly Broadcast	On **Off** ✳	Relays original documents to another fax machine.	
		2.Relay Domain	RelayXX:	Registers the Domain name.	
		3.Relay Report	On **Off** ✳	Prints the Relay Broadcast Report.	

The factory settings are shown in Bold with "✳".

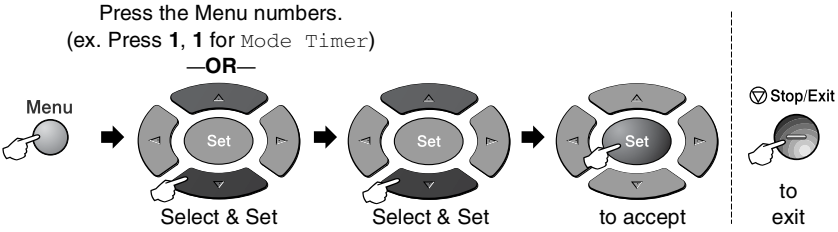

Main Menu	Submenu	Menu Selections	Options	Descriptions	Page
6.LAN (option) (Continued)	6.Setup Misc.	1.Netware	**On**✳ Off	Select On to use the MFC on a Netware network.	See Network User's Guide on the CD-ROM.
		2.Net Frame	**Auto**✳ 8023 ENET 8022 SNAP	Lets you specify the frame type.	
		3.AppleTalk	**On**✳ Off	Select On to use the MFC on a Macintosh network.	
		4.DLC/LLC	**On**✳ Off	Select On to use the MFC on a DLC/LLC network.	
		5.Net BIOS/IP	**On**✳ Off	Select On to use the MFC on a Net BIOS/IP network.	
		6.Ethernet	**Auto**✳ 100B-FD 100B-HD 10B-FD 10B-HD	Selects Ethernet link mode.	
		7.Time Zone	GMT-00:00	Sets the time zone for your country.	
	7.Scan to E-mail	—	**PDF**✳ TIFF	Scans the original into your E-mail application as a file attachment.	

With the optional paper tray #2

Main Menu	Submenu	Menu Selections	Options 1	Options 2	Descriptions	Page
2.Fax	1.Setup Receive (In Fax mode only)	5.Auto Reduction	Tray #1 Tray #2	**On**✳ Off	Reduces the size of incoming faxes.	5-6

The factory settings are shown in Bold with "✳".

4 Getting started

Initial Setup

Setting the Date and Time

Your MFC displays the date and time and if you set up the Station ID it prints on every fax you send. If there is a power failure, you may have to reset the date and time. All other settings will not be affected.

```
Initial Setup
2.Date/Time
```

1. Press **Menu**, **0**, **2**.
2. Enter the last two digits of the year.
   Press **Set**.
3. Enter two digits for the month.
   Press **Set**.
   (For example, enter 09 for September, or 10 for October.)
4. Enter two digits for the day.
   Press **Set**.
   (For example, enter 06 for 6th.)
5. Enter the time in 24-Hour format.
   Press **Set**.
   (For example, enter 15:25 for 3:25 P.M.)
6. Press **Stop/Exit**.
   The LCD now shows the date and time whenever the MFC is in Standby mode.

Setting the Station ID

You should store your name or company name and fax number to be printed on all fax pages that you send.

It is important that you enter the fax and telephone numbers in the internationally standardized format, i.e. in accordance with the following strict sequence:

- The “+” (plus) character (by pressing ✳ key)
- Your Country Code (e.g. “44” for the United Kingdom, “41” for Switzerland)
- Your local area code minus any leading “0” (“9” in Spain)
- A space
- Your number on the local exchange, using spaces to aid readability as appropriate.

As an example, if the machine is installed in the United Kingdom and the same line is to be used for both fax and voice calls, and your national telephone number is 0161-444 5555, then you must set the fax and telephone number parts of your station ID as: +44 161 444 5555.

```
Initial Setup
3.Station ID
```

1. Press **Menu**, **0**, **3**.
2. Enter your fax number (up to 20 digits).

   Press **Set**.
3. Enter your telephone number (up to 20 digits).

   Press **Set**.

   (If your telephone number and fax number are the same, enter the same number again).

- The telephone number you enter is only used for Cover Page features. (See *Composing the electronic Cover Page* on page 6-10.)
- You cannot enter a hyphen.

4 Use the dial pad to enter your name (up to 20 characters).
Press **Set**.
(See *Entering text* on page 4-3.)

5 Press **Stop/Exit**.
The LCD will show the date and time.

If the Station ID has already been programmed, the LCD will ask you to press **1** to make a change or **2** to exit without changing.

Entering text

When you are setting certain menu selections, such as the Station ID, you may need to type text into the MFC. Most number keys have three or four letters printed above them. The keys for **0**, **#** and ✳ do not have printed letters because they are used for special characters.

By pressing the appropriate number key repeatedly, you can access the character you want.

Press Key	one time	two times	three times	four times
2	A	B	C	2
3	D	E	F	3
4	G	H	I	4
5	J	K	L	5
6	M	N	O	6
7	P	Q	R	S
8	T	U	V	8
9	W	X	Y	Z

Inserting spaces

To enter a space in a fax number, press once between numbers.
To enter a space in a name, press twice between characters.

Making corrections

If you entered a letter incorrectly and want to change it, press ◄ to move the cursor under the incorrect character. Then press **Clear/Back**. The letter above the cursor will be deleted. Re-enter the correct character.

Repeating letters

If you need to enter a character that is on the same key as the previous character, press ► to move the cursor to the right before you press the key again.

Special characters and symbols

Press ✳, **#** or **0**, and then press ◄ or ► to move the cursor under the special character or symbol you want. Then press **Set** to select it.

Press ✳	for	(space) ! " # $ % & ’ ( ) ✳ + , - . / €
Press **#**	for	: ; < = > ? @ [ ] ^ _
Press **0**	for	Ä Ë Ö Ü À Ç È É 0

Setting the Phone Line Type

If you are connecting the MFC to a PBX or PABX, you need to change the Phone Line Type to PBX by completing the following steps.

```
Initial Setup
4.Phone Line Set
```

1. Press **Menu**, **0**, **4**.
2. Press ▲ or ▼ to select `ISDN`, `PBX` (or `Normal`).
   Press **Set**.
3. Press **Stop/Exit**.

PABX and TRANSFER

The MFC is initially set to be connected with PSTN (Public Switched Telephone Network) lines. However, many offices use a central telephone system or Private Automatic Branch Exchange (PABX). Your MFC can be connected to most types of PABX. The MFC's recall feature supports timed break recall only (TBR). TBR will work with most PABX systems, allowing you to gain access to an outside line or transfer calls to another extension. The feature works when the **Tel/R** key is pressed.

You can program a **Tel/R** key press as part of a number stored in a One-Touch or Speed-Dial location. When programming the One-Touch or Speed-Dial number (Function menu 2-3-1 or 2-3-2) press **Tel/R** first (the screen displays "!"), then enter the telephone number. If you do this, you do not need to press **Tel/R** each time before you dial using a One-Touch or Speed-Dial location. (See *Storing numbers for easy dialling* on page 7-1.)

General Setup

Setting the Mode Timer

The MFC has three temporary mode keys on the control panel: Fax, Copy and Scan. You can change the number of seconds or minutes the MFC takes after the last Copy or Scan operation before it returns to Fax mode. If you select Off, the MFC stays in the mode you used last.

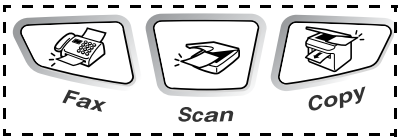


```
General Setup
1.Mode Timer
```

1. Press **Menu**, **1**, **1**.
2. Press ▲ or ▼ to select `0 Sec`, `30 Secs`, `1 Min`, `2 Mins`, `5 Mins` or `Off`.
3. Press **Set**.
4. Press **Stop/Exit**.

Setting the Paper Type

To get the best print quality, set the MFC for the type of paper you are using.

```
General Setup
2.Paper Type
```

```
Paper Type
1.Tray #1
```

1. Press **Menu**, **1**, **2**.

   —OR—

   If you have the optional paper tray, press **Menu**, **1**, **2**, **1** to set the paper type for `Tray #1` or **Menu**, **1**, **2**, **2** to set the paper type for `Tray #2`.
2. Press ▲ or ▼ to select `Thin`, `Plain`, `Thick`, `Thicker` or `Transparency`.
3. Press **Set**.
4. Press **Stop/Exit**.

You can select `Transparency` only when `A4`, `Letter` or `Legal` is selected in **Menu**, **1**, **3** for Tray #1 and Tray #2.

Setting the Paper Size

You can use eight sizes of paper for printing copies: A4, letter, legal, executive, A5, A6, B5 and B6 and three sizes of paper for printing faxes: A4, letter and legal. When you change the size of paper in the MFC, you will need to change the setting for Paper Size at the same time so your MFC can fit an incoming fax or reduced copy on the page.

1 Press **Menu**, **1**, **3**.

```
General Setup
3.Paper Size
```

—**OR**—

If you have the optional paper tray, press **Menu**, **1**, **3**, **1** to set the paper size for `Tray #1` or **Menu**, **1**, **3**, **2** to set the paper size for `Tray #2`.

```
Paper Size
1.Tray #1
```

2 Press ▲ or ▼ to select `A4`, `Letter`, `Legal`, `Executive`, `A5`, `A6`, `B5` or `B6`.

Press **Set**.

3 Press **Stop/Exit**.

- If you are using the optional paper tray, paper size A6 is not available.
- If you select `Transparency` in **Menu**, **1**, **2**, you can only select `A4`, `Letter` or `Legal`.

Setting the Ring Volume

You can turn the ring `Off` or you can select the ring volume level.

```
Volume
1.Ring
```

1. Press **Menu**, **1**, **4**, **1**.
2. Press ▲ or ▼ to select (`Low`, `Med`, `High` or `Off`).
   Press **Set**.
3. Press **Stop/Exit**.

—OR—

You can adjust the ring volume when your MFC is idle (not being used). In Fax mode , press ◄ or ► to adjust the volume level. Every time you press these keys, the MFC will ring so you can hear the active setting as the LCD shows it. The volume changes with each key press. The new setting will stay until you change it again.

Setting the Beeper Volume

You can change the beeper volume. The default setting is `Med`. When the beeper is on, the MFC beeps every time you press a key or make a mistake and after a fax is sent or received.

```
Volume
2.Beeper
```

1. Press **Menu**, **1**, **4**, **2**.
2. Press ▲ or ▼ to select your option (`Low`, `Med`, `High` or `Off`).
   Press **Set**.
3. Press **Stop/Exit**.

Setting the Speaker Volume

You can adjust the MFC's one-way speaker volume.

```
Volume
3.Speaker
```

1. Press **Menu**, **1**, **4**, **3**.
2. Press ▲ or ▼ to select (`Low`, `Med`, `High` or `Off`).
   Press **Set**.
3. Press **Stop/Exit**.

Turning on Automatic Daylight Savings Time

You can set the MFC to change automatically for Daylight Savings Time. It will reset itself forward one hour in the Spring and backward one hour in the Autumn. Make sure you have set the correct day and time in the `Date/Time` setting. The default setting is `On`.

```
General Setup
5.Auto Daylight
```

1. Press **Menu**, **1**, **5**.
2. Press ▲ or ▼ to select `On` (or `Off`).
   Press **Set**.
3. Press **Stop/Exit**.

Toner Save

You can conserve toner using this feature. When you set Toner Save to `On`, print appears somewhat lighter. The default setting is `Off`.

```
Ecology
1.Toner Save
```

1. Press **Menu**, **1**, **6**, **1**.
2. Press ▲ or ▼ to select `On` (or `Off`).
3. Press **Set**.
4. Press **Stop/Exit**.

Sleep Time

Setting the Sleep Time reduces power consumption by turning off the fuser inside the MFC, while it is idle. You can choose how long the MFC is idle (from 00 to 99 minutes) before it goes into sleep mode. The timer is automatically reset when the MFC receives a Fax or PC data, or makes a copy. The default setting is 05 minutes. While the MFC is in sleep mode, you will see `Sleep` on the LCD. If you try to print or copy in sleep mode, there will be a short delay while the fuser warms up to working temperature.

1. Press **Menu**, **1**, **6**, **2**.
2. Use the dial pad to enter the length of time the MFC is idle before it goes into sleep mode (00 to 99).
3. Press **Set**.
4. Press **Stop/Exit**.

- If you want to turn sleep mode off, press **Secure** and **Job Cancel** simultaneously and ▲ or ▼ to select `Off` in Step 2.
- If the MFC is in Sleep Mode when you change the Sleep Time, the new setting will take effect the next time the MFC copies, prints or is restarted.

Power Save

Setting Power Save mode reduces power consumption. If Power Save Mode is switched On, when the MFC is idle, it drops into power save mode in approx. 10 minutes automatically. The MFC will not display the date and time in this condition.

```
Ecology
3.Power Save
```

1. Press **Menu**, **1**, **6**, **3**.
2. Press ▲ or ▼ to select On (or Off).
3. Press **Set** when the screen displays your selection.
4. Press **Stop/Exit**.

Setting the LCD Contrast

You can change the contrast to help the LCD look lighter or darker.

```
General Setup
7.LCD Contrast
```

1. Press **Menu**, **1**, **7**.
2. Press ▲ to increase the contrast.

   —**OR**—

   Press ▼ to decrease the contrast.

   Press **Set**.
3. Press **Stop/Exit**.

Setting the Tray Use for Copy mode

If your MFC does not have the optional tray #2, you can skip this setting. The default setting of `Auto` allows *1your MFC to choose the paper from the optional Tray #2 when paper is out in Tray #1 or *2when the size of the original document will fit best on the paper in Tray #2.

1. Press **Menu**, **1**, **8**.
2. Press ▲ or ▼ to select `Tray#1 Only`, `Tray#2 Only` or `Auto`.

```
General Setup
8.Tray Use:Copy
```

3. Press **Set**.
4. Press **Stop/Exit**.

- *1 Copies will automatically be printed from Tray #2 only if the Paper Size setting for Tray #2 is the same as Tray #1.
- *2 Copies will automatically be printed from Tray #2 if the Paper Size setting for Tray #2 is different than Tray #1 and this paper size is more suitable for the scanned original document.

Setting the Tray Use for Fax mode

If your MFC does not have the optional tray #2, you can skip this setting. The default setting of `Auto` allows your MFC to choose the paper from the optional Tray #2 if Tray #1 is out of paper or if incoming faxes will fit best on the paper in Tray #2.

```
General Setup
9.Tray Use:Fax
```

1. Press **Menu**, **1**, **9**.
2. Press ▲ or ▼ to select `Tray#1 Only`, `Tray#2 Only` or `Auto`.
3. Press **Set**.
4. Press **Stop/Exit**.

If Auto Reduction is turned on, incoming faxes will be printed from the tray that is set for Auto Reduction. (See *Printing a reduced incoming fax (Auto Reduction)* on page 5-6.)

Setting Tone or Pulse dialling mode (Excluding the Nordic Countries)

Your MFC comes set for Tone dialling service (multi-frequency). If you have Pulse dialling service (rotary), you need to change the dialling mode.

```
Initial Setup
5.Tone/Pulse
```

1. Press **Menu**, **0**, **5**.
2. Press ▲ or ▼ to select `Pulse` (or `Tone`).
   Press **Set**.
3. Press **Stop/Exit**.

5 Setup Receive

Basic receiving operations

Choosing the Receive Mode

There are four different Receive Modes for your MFC. You can choose the mode that best suits your needs.

LCD	How it works	When to use it
`Fax Only` (automatic receive)	The MFC automatically answers every call as a fax.	For dedicated fax lines.
`Fax/Tel` (fax and telephone) (with an external or extension telephone)	The MFC controls the line and automatically answers every call. If the call is a fax it will receive the fax. If the call is not a fax it will ring (pseudo/double ring) for you to pick up the call.	Use this mode if you expect to receive lots of fax messages and few telephone calls. You can *not* have an answering machine on the same line, even if it is on a separate wall socket/phone socket on the same line. You can *not* use the telephone company's Voice Mail in this mode.
`External TAD` (with an external answering machine)	The external answering machine (TAD) automatically answers every call. Voice messages are stored on the external TAD. Fax messages are printed.	Use this mode if you have an external answering machine on your phone line. The TAD setting works only with an external answering machine. Ring Delay and F/T Ring Time do not work in this setting.
`Manual` (manual receive) (with an external or extension telephone or with Distinctive Ring)	You control the phone line and must answer every call yourself.	Use this mode when you are using a computer modem on the same line, or if you do not receive many fax messages, or with Distinctive Ring. If you answer and hear fax tones, wait until the MFC takes over the call, then hang up. (See *Fax Detect* on page 5-5.)

To select or change your Receive Mode

1. Press **Menu**, **0**, **1**.

```
Initial Setup
1.Receive Mode
```

2. Press ▲ or ▼ to select `Fax Only`, `Fax/Tel`, `External TAD` or `Manual`.

   Press **Set**.

3. Press **Stop/Exit**.

If you are changing the Receive Mode while in another operation, the LCD will return to that operation.

Current Receive Mode

```
12/10 11:53 Fax
Res:Standard
```

`Fax`: Fax Only

`F/T`: Fax/Tel

`TAD`: External TAD

`Mnl`: Manual

Setting the Ring Delay

The Ring Delay sets the number of times the MFC rings before it answers in `Fax Only` or `Fax/Tel` mode. If you have extension phones on the same line as the MFC, keep the Ring Delay setting of 4. (See *Fax Detect* on page 5-5 and *Operation from extension telephones* on page 5-9.)

1. If it is not illuminated in green, press (**Fax**).
2. Press **Menu**, **2**, **1**, **1**.

```
Setup Receive
1.Ring Delay
```

3. Press or to select how many times the line rings before the MFC answers (00-04 UK only) (00-05 Nordic countries only).

   Press **Set**.

   (If you select 00, the line will not ring at all.)
4. Press **Stop/Exit**.

Setting the F/T Ring Time (Fax/Tel mode only)

If you set the Receive Mode to Fax/Tel, you will need to decide how long the MFC will signal you with its special pseudo/double-ring when you have a *voice* call. (If it's a fax call, the MFC prints the fax.)

This pseudo/double-ring happens after the initial ringing from the phone company. Only the MFC rings (for 20, 30, 40 or 70 seconds) and no other phones on the same line will ring with the special pseudo/double-ring. However, you can still answer the call on any extension phone (in a separate wall socket/phone socket) or on the same line as the MFC. (See *Operation from extension telephones* on page 5-9.)

1. If it is not illuminated in green, press (**Fax**).
2. Press **Menu**, **2**, **1**, **2**.

```
Setup Receive
2.F/T Ring Time
```

3. Press or to select how long the MFC will ring to alert you that you have a voice call.

   Press **Set**.
4. Press **Stop/Exit**.

Even if the caller hangs up during the pseudo/double-ringing, the MFC will continue to ring for the set time.

Fax Detect

When you use this feature, you do not have to press **Start** or the Fax Receive Code ✳ **51** when you answer a fax call. Selecting `On` allows the MFC to receive fax calls automatically, even if you lift the handset of an extension or external phone. When you see `Receiving` on the LCD or when you hear 'chirps' through the handset of an extension phone connected to another wall socket/phone socket, just replace the handset and your MFC will do the rest. Selecting `Off` means you will have to activate the MFC yourself by lifting the handset of an external or extension phone, and then press **Start** on the MFC —**OR**—by pressing ✳ **51** if you are not at your MFC. (See *Operation from extension telephones* on page 5-9.)

If this feature is set to `On`, but your MFC does not connect a fax call when you lift an extension or external phone handset, press the Fax Receive Code ✳ **51**.

If you send faxes from a computer on the same phone line and the MFC intercepts them, set Fax Detect to `Off`.

1. If it is not illuminated in green, press (**Fax**).
2. Press **Menu**, **2**, **1**, **3**.
3. Use ▲ or ▼ to select `On` (or `Off`).

   Press **Set**.
4. Press **Stop/Exit**.

```
Setup Receive
3.Fax Detect
```

Printing a reduced incoming fax (Auto Reduction)

If you choose On, the MFC automatically reduces each page of an incoming fax to fit on one page of letter, legal or A4 size paper, regardless of the paper size of the original document. The MFC calculates the reduction ratio by using the page size of the original document and your Paper Size setting (**Menu**, **1**, **3**).

1. If it is not illuminated in green, press (**Fax**).
2. Press **Menu**, **2**, **1**, **5**.

```
Setup Receive
5.Auto Reduction
```

3. If you have the optional paper tray #2, press or to select Tray #1 or Tray #2.
   Press **Set**.
4. Use or to select On (or Off).
   Press **Set**.
5. Press **Stop/Exit**.

If you receive faxes that are split onto two pages, turn on this setting. But if the original document is too long, the MFC may print it on two pages.

Reception into memory

As soon as the paper tray becomes empty during fax reception, the screen will display `Check Paper`; please put some paper in the paper tray. (See *How to load paper* on page 2-3.)

If the Memory Receive switch is ON at this time…

The current fax reception will continue, with the remaining pages being stored in memory, if it is available. Subsequent incoming faxes will also be stored into memory until the memory is full, following with no further incoming fax calls will be automatically answered. To print all data, put paper in the paper tray.

If the Memory Receive switch is OFF at this time…

The current fax reception will continue, with the remaining page(s) being stored in memory, subject to available memory. Subsequent incoming fax calls will not be automatically answered until fresh paper is put in the paper tray. To print the last fax received, load paper in the paper tray.

1. If it is not illuminated in green, press (**Fax**).
2. Press **Menu**, **2**, **1**, **6**.

```
Setup Receive
6.Memory Receive
```

3. Use ▲ or ▼ to select `On` (or `Off`).
   Press **Set**.
4. Press **Stop/Exit**.

Printing a fax from the memory

If you have selected Fax Storage (**Menu**, **2**, **5**, **1**), you can still print a fax from the memory when you are at your MFC. (See *Setting Fax Storage* on page 8-2.)

```
Remote Fax Opt
3.Print Document
```

1. Press **Menu**, **2**, **5**, **3**.
2. Press **Start**.
3. After printing has finished, press **Stop/Exit**.

Setting the Print Density

You can adjust print density, making your printed pages darker or lighter.

```
Setup Receive
7.Print Density
```

1. If it is not illuminated in green, press (**Fax**).
2. Press **Menu**, **2**, **1**, **7**.
3. Press to make the print darker.

   —**OR**—

   Press to make the print lighter.

   Press **Set**.
4. Press **Stop/Exit**.

Advanced receiving operations

Operation from extension telephones

If you answer a fax call on an extension telephone, or an external telephone into the correct socket on the machine, you can make your MFC take the call by using the Remote Activation Code. When you press the Remote Activation Code **✳51**, the MFC starts to receive a fax.
(See *Fax Detect* on page 5-5.)
If the MFC answers a voice call and pseudo/double-rings for you to take over, use the Deactivation Code **#51** to take the call at an extension phone. (See *Setting the F/T Ring Time (Fax/Tel mode only)* on page 5-4.)

If you answer a call and no one is on the line, you should assume that you're receiving a manual fax.

- At an extension phone (on a separate telephone wall socket/phone socket), press **✳51**, wait for fax-receiving tones (chirps), and then hang up.
- At an external phone (connected to the MFC's EXT socket), press **✳51** and wait for the phone to be disconnected before you hang up (the LCD shows `Receiving`).

Your caller will have to press **Start** to send the fax.

For Fax/Tel mode only

When the MFC is in Fax/Tel mode, it will use the F/T Ring Time (pseudo/double-ringing) to alert you to pick up a voice call.

Lift the external telephone's handset, and then press **Tel/R** to answer.

If you're at an extension phone, you will need to lift the handset during the F/T Ring Time and then press **#51** between the double rings. If no one is on the line, or if someone wants to send you a fax, send the call back to the MFC by pressing **✳51**.

Using a cordless external handset

If your cordless telephone is connected to the correct socket on the MFC and you typically carry the cordless handset elsewhere, it is easier to answer calls during the Ring Delay. In Fax/Tel mode if you let the MFC answer first, you will have to go to the MFC so you can press **Tel/R** to transfer the call to the cordless handset.

Changing the remote codes

Remote Codes might not work with some telephone systems. The preset Remote Activation code is **✳51**. The preset Deactivation code is **# 51**.

If you are always disconnected when accessing your external TAD remotely, try changing the Remote Activation code and Deactivation code to another three-digit code (such as **###** and **998**).

1. If it is not illuminated in green, press (**Fax**).
2. Press **Menu**, **2**, **1**, **4**.

```
Setup Receive
4.Remote Code
```

3. Press ▲ or ▼ to select `On` (or `Off`).
   Press **Set**.
4. Enter the new Remote Activation code.
   Press **Set**.
5. Enter the new Deactivation code.
   Press **Set**.
6. Press **Stop/Exit**.

Polling

Polling is the process of retrieving faxes from another fax machine. You can use your MFC to 'poll' other machines, or you can have someone poll your MFC.

Everyone who is involved in Polling needs to set up their fax machines for Polling. When someone polls your MFC to receive a fax, they pay for the call. If you poll someone's fax machine to receive a fax, you pay for the call.

Some fax machines do not respond to the Polling feature.

Secure Polling

Secure Polling is a way to keep your original documents and others from falling into the wrong hands while the MFC is set up for polling. You can use Secure Polling only with another Brother fax machine. Anyone who polls to receive a fax must enter the polling secure code.

Setup for Polling Receive (Standard)

Polling Receive is when you call another fax machine to receive a fax from it.

1. If it is not illuminated in green, press (**Fax**).
2. Press **Menu**, **2**, **1**, **8**.

```
Setup Receive
8.Polling RX
```

3. Press or to select `Standard`.
   Press **Set**.
4. Enter the fax number you are polling.
   Press **Start**.

Setup for Polling Receive with Secure Code

You need to make sure you are using the same secure code as the other party.

1. If it is not illuminated in green, press (**Fax**).
2. Press **Menu**, **2**, **1**, **8**.
3. Press or to select `Secure`.

   Press **Set**.

```
Setup Receive
8.Polling RX
```

4. Enter a four-digit secure code.

   This is the same as the security code of the fax machine you are polling.
5. Press **Set**.
6. Enter the fax number you are polling.
7. Press **Start**.

Setup Delayed Polling Receive

You can set the MFC to begin Polling Receive at a later time.

1. If it is not illuminated in green, press (**Fax**).
2. Press **Menu**, **2**, **1**, **8**.
3. Press or to select `Timer`.

   Press **Set**.

```
Setup Receive
8.Polling RX
```

4. The screen prompts you to enter the time you want to begin polling.
5. Enter the time (in 24-hour format) you want to begin polling.

   For example, enter 21:45 for 9:45 PM.
6. Press **Set**.
7. Enter the fax number you are polling,

   Press **Start**.

   The MFC makes the polling call at the time you entered.

You can set up only one Delayed Polling.

Sequential Polling

The MFC can request original documents from several fax units in a single operation. You just specify several destinations in Step 5. Afterward, a Sequential Polling Report will be printed.

1. If it is not illuminated in green, press (**Fax**).
2. Press **Menu**, **2**, **1**, **8**.

   Setup Receive
   8.Polling RX

3. Press or to choose `Standard`, `Secure` or `Timer`.

   Press **Set** when the screen displays the setting you want.
4. If you selected `Standard`, go to Step 5.
   - If you selected `Secure`, enter a four-digit number and press **Set**, and then go to Step 5.
   - If you selected `Timer`, enter the time (in 24-hour format) you want to begin polling and press **Set**, and then go to Step 5.
5. Specify the destination fax machines (up to 382), which you wish to poll by using One-Touch, Speed-Dial, Search, a Group (see *Setting up Groups for Broadcasting* on page 7-5) or the dial pad. You must press **Set** between each location.
6. Press **Start**.

   The MFC polls each number or group in turn for a original document.

Press **Stop/Exit** while the MFC is dialling to cancel the polling process.

To cancel all sequential polling receive jobs, press **Menu**, **2**, **6**. (See *Cancelling a scheduled job* on page 6-9.)

Telephone services

BT Call Sign (U.K. only)

This MFC feature lets you use the BT Call Sign subscriber service which allows you to have at least two separate telephone numbers on one phone line. Each phone number has its own distinctive ringing pattern, so you know which phone number is ringing. This is one way you can have a separate phone number for your MFC.

Your MFC has a BT Call Sign compatible distinctive ringing function, allowing you to dedicate a second phone number (on the same phone line) just for receiving faxes.

You can switch BT Call Sign off temporarily, then turn it back on. When you get a new fax number, make sure you reset this function.

When you set the BT Call Sign feature to ON, the receive mode is set to `Manual` automatically. You cannot change the receive mode to any other mode while the BT Call Sign is set to on.

To enable the MFC to work with BT Call Sign (Only with your external phone)

1. Press **Menu**, **2**, **0**, **5**.

   The screen displays the current setting of this feature.
2. Press ▲ or ▼ to select `On` (or `Off`).
3. Press **Set**.
4. Press **Stop/Exit**.

If you turn off the BT Call Sign, the receive mode stays set to `Manual`. You need to set receive mode again.

6 Setup Send

How to enter Fax mode

Before sending faxes, make sure (**Fax**) is illuminated in green. If not, press (**Fax**) to enter Fax mode. The default setting is Fax.

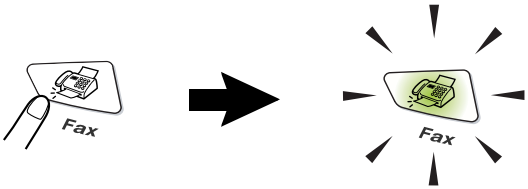

How to dial

There are four ways to dial.

Manual dialling

Press all of the digits of the phone or fax number.

One-Touch dialling

Press the One-Touch Key of the location you want to call. (See *Storing One-Touch Dial numbers* on page 7-1.)

To dial One-Touch numbers 17 to 32, hold down **Shift** as you press the One-Touch Key.

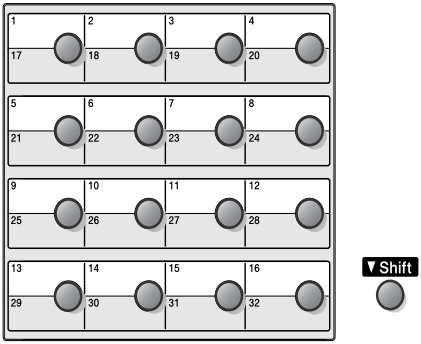

Speed-Dialling

Press **Search/Speed Dial**, **#**, and then the three digit Speed-Dial number. (See *Storing Speed-Dial numbers* on page 7-3.)

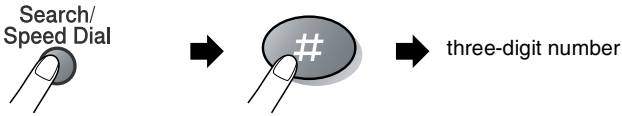

Search

You can search for names you have stored in the One-Touch and Speed-Dial memories. Press **Search/Speed Dial** and the navigation keys to search. (See *Storing One-Touch Dial numbers* on page 7-1 and *Storing Speed-Dial numbers* on page 7-3.)

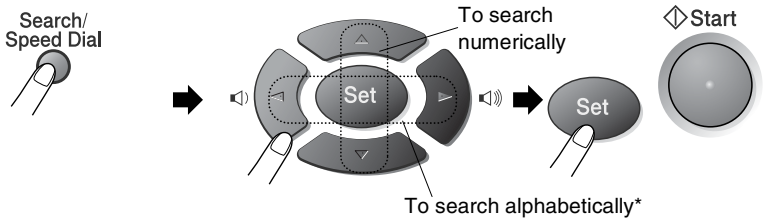

* To search alphabetically, you can use dial pad to enter the first letter of the name you are looking for.

How to fax

Manual transmission

Manual transmission lets you hear the dialling, ringing and fax-receiving tones while sending a fax.

1. If it is not illuminated in green, press (**Fax**). Place the original document face down in the ADF.
2. Pick up the handset of the external phone and listen for a dial tone.
3. On the external phone, dial the fax number you want to call.
4. When you hear the fax tone, press **Start**.
5. Replace the handset of the external phone.

Automatic transmission

This is the easiest way to send a fax.

1. If it is not illuminated in green, press (**Fax**). Place the original document face down in the ADF.
2. Enter the fax number using the dial pad, One-Touch, Speed-Dial or Search.
   (See *One-Touch dialling* on page 6-2 and *Speed-Dialling* on page 6-2.)
3. Press **Start**.

Out of Memory message

If you get an `Out of Memory` message while scanning the first page of a fax, press **Stop/Exit** to cancel the fax. If you get an `Out of Memory` message while scanning a subsequent page, you will have the option to press **Start** to send the pages scanned so far, or to press **Stop/Exit** to cancel the operation.

Sending a fax at the end of a conversation

At the end of a conversation you can send a fax to the other party before you both hang up.

1. Ask the other party to wait for fax tones (beeps) and then to press **Start** before hanging up.
2. If it is not illuminated in green, press (**Fax**). Place the original document face down in the ADF.

   Press **Start**.
3. Replace the external handset.

Basic sending operations

Sending faxes using multiple settings

When you send a fax you can choose any combination of these settings: cover page, contrast, resolution, overseas mode, delayed fax timer, polling transmission or real time transmission. After each setting is accepted, the LCD will ask if you want to enter more settings:

Press **1** to select more settings. The LCD will return to the `Setup Send` menu.

```
Next
1.Yes 2.No
```

—OR—

Press **2** if you have finished choosing settings and go to the next step.

Contrast

If your original document is very light or very dark, you may want to set the contrast.

Use `Light` to send a light original document.

Use `Dark` to send a dark original document.

1. If it is not illuminated in green, press (**Fax**). Place the original document face down in the ADF.
2. Press **Menu**, **2**, **2**, **1**.

```
Setup Send
1.Contrast
```

3. Press or to select `Auto`, `Light` or `Dark`.

   Press **Set**.
4. Press **1** if you want to choose more settings and the LCD will return to the `Setup Send` menu.

   —OR—

   Press **2** if you have finished choosing settings for this page, and then go to Step 5.
5. Enter a fax number.
6. Press **Start**.

Fax Resolution

When you have an original document in the ADF you can use the **Resolution** key to change the setting temporarily (for this fax only).

If it is not illuminated in green, press (**Fax**). Press **Resolution** repeatedly until the LCD shows the setting you want.

—OR—

You can change the default setting.

1. If it is not illuminated in green, press (**Fax**).
2. Press **Menu**, **2**, **2**, **2**.
3. Press or to select the resolution you want.
   Press **Set**.
4. Press **Stop/Exit**.

```
Setup Send
2.Fax Resolution
```

`Standard:`	Suitable for most typed original documents.
`Fine:`	Good for small print and transmits a little slower than Standard resolution.
`S.Fine:`	Good for small print or artwork and transmits slower than Fine resolution.
`Photo:`	Use when the original document has varying shades of gray. This has the slowest transmission time.

Manual and automatic fax Redial

If you are sending a fax manually and the line is busy, press **Redial/Pause**, and then press **Start** to try again. If you want to make a second call to the last number dialled, you can save time by pressing **Redial/Pause** and **Start**.

Redial/Pause only works if you dialled from the control panel.
If you are sending a fax automatically and the line is busy, the MFC will automatically redial up to three times at five minutes intervals.

Dual Access

You can dial a number, and begin scanning the fax into memory—even when the MFC is receiving, sending or printing a fax from memory. The LCD shows the new job number.

If you get an `Out of Memory` message while scanning the first page of a fax, press **Stop/Exit** to cancel scanning. If you get an `Out of Memory` message while scanning a subsequent page, you can press **Start** to send the pages scanned so far, or press **Stop/Exit** to cancel the operation.

1. If it is not illuminated in green, press (**Fax**). Place the original document face down in the ADF.
2. Enter the fax number.
3. Press **Start** to send the fax.

   The MFC starts scanning the first page and the LCD shows the job number (#XXX) of the fax. You can repeat Steps 1 to 3 for the next fax.

Real Time Transmission

When you are sending a fax, the MFC will scan the original documents into the memory before sending. Then, as soon as the phone line is free, the MFC will start dialling and sending.

If the memory becomes full, the MFC will send the original document in real time (even if `Real Time TX` is set to `Off`).

Sometimes, you may want to send an important original document immediately, without waiting for memory transmission. You can set `Real Time TX` to `On` for all original documents or for the next fax only.

1. If it is not illuminated in green, press (**Fax**). Place the original document face down in the ADF.
2. Press **Menu**, **2**, **2**, **5**.

```
Setup Send
5.Real Time TX
```

3. To change the default setting, press or to select `On` (or `Off`).

   Press **Set**.

   Go to Step 5.

   —**OR**—

   For the next fax transmission only, press or to select `Next Fax Only`.

   Press **Set**.
4. Press or to select `Next Fax:On` (or `Next Fax:Off`).

   Press **Set**.
5. Press **1** if you want to choose more settings and the LCD will return to the `Setup Send` menu.

   —**OR**—

   Press **2** if you have finished choosing settings.
6. Enter the fax number.
7. Press **Start** to send the fax.

Checking job status

Check which jobs are still waiting in the memory to be sent. (If there are no jobs, the LCD shows `No Jobs Waiting`.)

```
Fax
6.Remaining Jobs
```

1. Press **Menu**, **2**, **6**.
2. If you have more than one job waiting, press ▲ or ▼ to scroll through the list.
3. Press **Stop/Exit**.

Cancelling a fax in progress

If you want to cancel a fax, while the MFC is scanning, dialling or sending it, press **Stop/Exit**.

Cancelling a scheduled job

You can cancel a fax job that is stored and waiting in the memory. (See *Checking job status* on page 6-9.)

```
Fax
6.Remaining Jobs
```

1. Press **Menu**, **2**, **6**.

   Any jobs that are waiting will appear on the LCD.
2. If you have more than one job waiting, press ▲ or ▼ to select the job you want to cancel.

   Press **Set**.

   —**OR**—

   If you only have one job waiting, go to Step 3.
3. Press **1** to cancel.

   To cancel another job go to Step 2.

   —**OR**—

   Press **2** to exit without cancelling.
4. Press **Stop/Exit**.

Advanced sending operations

Composing the electronic Cover Page

The Cover Page is created at the receiving machine. Your Cover Page includes the name stored in the One-Touch or Speed-Dial memory. If you're dialling manually, the name is left blank.

The Cover Page shows your Station ID and the number of pages you're sending. (See *Setting the Station ID* on page 4-2.) If you have Cover Page set to `On` (**Menu**, **2**, **2**, **7**), the number of pages is left blank.

You can select a comment to include on your Cover Page.

`1.Comment Off`

`2.Please Call`

`3.Urgent`

`4.Confidential`

Instead of using one of the preset comments, you can enter two personal messages of your own, up to 27 characters long. Use the chart on page 4-3 for help entering characters.
(See *Composing your own comments* on page 6-11.)

`5.(User Defined)`

`6.(User Defined)`

Most of the `Setup Send` settings are temporary to allow you to make changes for each fax you send. However, when you set up your Cover Page and Cover Page Comments, you are changing the default settings so they will be available while faxing.

Composing your own comments

You can set up two comments of your own.

1. If it is not illuminated in green, press (**Fax**).
2. Press **Menu**, **2**, **2**, **8**.

```
Setup Send
8.Coverpage Note
```

3. Press or to choose 5 or 6 for your own comment.

   Press **Set**.
4. Use the dial pad to enter your customized comment.

   Press **Set**.

   (See *Entering text* on page 4-3.)
5. Press **1** if you want to choose more settings and the LCD will return to the `Setup Send` menu.

   —**OR**—

   Press **2** to exit.

Cover page for the next fax only

This feature does not work without first setting the Station ID. So make sure it has been set. (See *Setting the Station ID* on page 4-2.) If you only want to send a Cover Page with a particular fax, this Cover Page will include the number of pages in your original document.

1. If it is not illuminated in green, press (**Fax**). Place the original document face down in the ADF.
2. Press **Menu**, **2**, **2**, **7**.

```
Setup Send
7.Coverpg Setup
```

3. When LCD shows `Next Fax Only`.
   Press **Set**.
4. Press or to select `Next Fax:On` (or `Next Fax:Off`).
   Press **Set**.
5. Press or to select one of the standard or your own comments.
   Press **Set**.
6. Enter two digits to show the number of pages you are sending.
   Press **Set**.
   (For example, press **0**, **2** for 2 pages or enter **0 0** to leave the number of pages blank. If you make a mistake, press to back up and re-enter the number of pages.)
7. Press **1** if you want to choose more settings and the LCD will return to the `Setup Send` menu.
   —**OR**—
   Press **2** if you have finished choosing settings.
8. Enter the fax number you're calling.
9. Press **Start**.

Send a cover page for all faxes

This feature does not work without the Station ID. Please be sure it has been set before continuing. (See *Setting the Station ID* on page 4-2.)

You can set the MFC to send a cover page whenever you send a fax. The number of pages in your fax is not included when you use this setting.

1. If it is not illuminated in green, press (**Fax**).
2. Press **Menu**, **2**, **2**, **7**.
3. Press or to select `On`.

   Press **Set**.

```
Setup Send
7.Coverpg Setup
```

4. If you selected `On`, Press or to select one of the standard or your own comments.

   Press **Set**.
5. Press **1** if you want to choose more settings and the LCD will return to the `Setup Send` menu.

   —**OR**—

   Press **2** to exit if you have finished choosing settings.

Using a printed cover page

If you prefer to use a printed cover page that you can write on, you can print the sample page and attach it to your fax.

1. If it is not illuminated in green, press (**Fax**).
2. Press **Menu**, **2**, **2**, **7**.
3. Press or to select `Print Sample`.

   Press **Set**.

```
Setup Send
7.Coverpg Setup
```

4. Press **Start**. Your MFC prints a copy of your cover page.
5. Press **Stop/Exit**.

Broadcasting

Broadcasting is when the same fax message is automatically sent to more than one fax number. Using the **Set** key, you can include Groups, One-Touch, Speed-Dial numbers and up to 50 manually dialled numbers. If you did not use up any of the numbers for Groups, access codes or credit card numbers, you can 'broadcast' faxes to as many as 382 different numbers. However, the available memory will vary depending on the types of jobs in the memory and the number of locations used for broadcasting. If you broadcast to the maximum numbers available, you will not be able to use Dual Access and Delayed fax.

To include One-Touch or Speed-Dial numbers and manually dialled numbers in the same broadcast, you must press **Set** between each of the numbers. Use **Search/Speed Dial** to help you choose the numbers easily.
(See *Setting up Groups for Broadcasting* on page 7-5.)

After the broadcast is finished, a Broadcast Report will be printed to let you know the results.

- Enter the long dialling sequence numbers as you would normally, but remember that each One-Touch and Speed-Dial number counts as one number, so the number of locations you can store becomes limited.
- If the memory is full, press **Stop/Exit** to stop the job or if more than one page has been scanned, press **Start** to send the portion that is in the memory.

1. If it is not illuminated in green, press (**Fax**). Place the original document face down in the ADF.
2. Enter a number using One-Touch, Speed-Dial, a Group number, Search or manual dialling using the dial pad.

   (Example: Group number)

3 When the LCD displays the fax number or name of the other party, press **Set**.

You will be asked to press the next number.

4 Enter the next number.

(Example: Speed-Dial number)

5 When the LCD displays the fax number or name of the other party, press **Set**.

6 Enter another fax number.

(Example: Manual dialling using the dial pad.)

7 Press **Start**.

Overseas Mode

If you are having difficulty sending a fax overseas due to possible interference on the phone line, we recommend that you turn on the Overseas Mode. After you send a fax using this feature, the feature will turn itself off.

1. If it is not illuminated in green, press (**Fax**). Place the original document face down in the ADF.
2. Press **Menu**, **2**, **2**, **9**.
3. Press or to select `On` (or `Off`).

   Press **Set**.

```
Setup Send
9.Overseas Mode
```

4. Press **1** if you want to choose more settings and the LCD will return to the `Setup Send` menu.

   —OR—

   Press **2** if you have finished choosing settings.
5. Enter the fax number you're calling.
6. Press **Start**.

Delayed Fax

During the day you can store up to 50 faxes in the memory to be sent within 24 hours. These faxes will be sent at the time of day you enter in Step 3. Press **Set** to accept it, or enter another time for the faxes to be sent.

1. If it is not illuminated in green, press (**Fax**). Place the original document face down in the ADF.
2. Press **Menu**, **2**, **2**, **3**.

```
Setup Send
3.Delayed Fax
```

3. Enter the time you want the fax to be sent (in 24-hour format).

   Press **Set**.

   (For example, enter 19:45 for 7:45 PM.)

   Press **1** to leave the original documents waiting in the ADF.

   —**OR**—

   Press **2** to scan the original document into memory.
4. Press **1** if you want to choose more settings and the LCD will return to the `Setup Send` menu.

   —**OR**—

   Press **2** if you have finished choosing settings.
5. Enter the fax number.
6. Press **Start**.

Delayed Batch Transmission

Before sending the delayed faxes, your MFC will help you economize by sorting all the faxes in the memory by destination and scheduled time. All delayed faxes that are scheduled to be sent at the same time to the same fax number will be sent as one fax to save transmission time.

1. If it is not illuminated in green, press (**Fax**).
2. Press **Menu**, **2**, **2**, **4**.
3. Press or to select `On` (or `Off`).

   Press **Set**.
4. Press **Stop/Exit**.

```
Setup Send
4.Batch TX
```

Setting up Polled Transmission

Polled Transmission is when you set up your MFC to wait with an original document so another fax machine can call and retrieve it. When you choose `Secure`, anyone who polls the MFC must enter the polling secure code.

1. If it is not illuminated in green, press (**Fax**). Place the original document that is going to be retrieved face down in the ADF.
2. Press **Menu**, **2**, **2**, **6**.
3. Press or to choose `Standard` or `Secure`.

   Press **Set**.
4. If you selected `Standard`, go to Step 5.

   —OR—

   If you selected `Secure`, enter a four-digit number and press **Set**, and then go to Step 5.

```
Setup Send
6.Polled TX
```

5 Press **1** for `Doc` to leave the original documents waiting in the ADF.

—**OR**—

Press **2** for `Memory` to scan the original document into the memory.

6 Press **1** if you want to choose more settings and the LCD will return to the `Setup Send` menu.

—**OR**—

Press **2** if you have finished choosing settings, and go to Step 7.

7 Press **Start**.

If you chose `Memory` in Step 5, the MFC starts scanning the original document.

- If you press **1** in Step 5, the original document remains in the ADF until your MFC is polled. If you must use your MFC before the polled transmission occurs, you must first cancel this job.
- If you press **2** in Step 5, the original document will be stored and can be retrieved from any other fax machine until you delete the fax in memory by using the Cancelling a Job setting. (See *Cancelling a scheduled job* on page 6-9.)
- You can use Secure Polling only with another Brother fax machine.

Memory Security

Memory Security lets you prevent unauthorized access to the MFC. You will not be able to continue to schedule Delayed Faxes or Polling jobs. However, any pre-scheduled Delayed Faxes will be sent when you turn Memory Security `On`, so they will not be lost.

If you have selected Fax Forwarding or Fax Storage (**Menu**, **2**, **5**, **1**) before you turn Memory Security `On`, then Fax Forwarding or Remote Retrieval will continue to work.

While Memory Security is `On` the following operations are available:

- Receiving faxes into memory (limited by memory capacity)
- Fax Forwarding
- Remote Retrieval

While Memory Security is `On` the following operations are NOT available:

- Sending faxes
- Printing received faxes
- Copy
- PC printing
- PC scanning

To print the faxes in memory, turn Memory Security `Off`.

Setting up the password

If you forget the Memory Security password, please call Brother Customer Service.

```
Miscellaneous
1.Mem Security
```

1. Press **Menu**, **2**, **0**, **1**.
2. Enter a 4-digit number for the password.

   Press **Set**.

   If you are entering the password for the first time, the LCD shows `Verify`.
3. Re-enter the password.

   Press **Set**.

To change a registered password, select `Set Password` after Step 1, enter the old password, and then go to Step 2.

Turning Memory Security on

```
Miscellaneous
1.Mem Security
```

1. Press **Menu**, **2**, **0**, **1**.
2. Press ▲ or ▼ to select `Set Security`.

   Press **Set**.
3. Enter the registered 4-digit password.

   Press **Set**.

   The MFC goes offline and the LCD shows `Secure Mode`.

If there is a power failure, the data in the memory will remain for up to 4 days.

Turning Memory Security off

1. Press **Menu**.

   Enter the registered 4-digit password and press **Set**.
2. Memory Security is automatically turned off and the LCD shows the Date and Time.

If you enter the wrong Password, the LCD shows `Wrong Password` and stays offline. The MFC will stay in Secure Mode until the registered password is entered.

7 Auto Dial numbers and dialling options

Storing numbers for easy dialling

You can set up your MFC to do three types of easy dialling: One-Touch, Speed-Dial and Groups for Broadcasting faxes.

If you lose electrical power, the auto dial numbers that are in the memory will not be lost.

Storing One-Touch Dial numbers

Your MFC has 16 One-Touch keys where you can store 32 fax or phone numbers for automatic dialling. To access numbers 17 to 32, hold down **Shift** as you press the One-Touch key. When you press a One-Touch key the LCD shows the name, if you stored it, or the number. (See *One-Touch dialling* on page 6-2.)

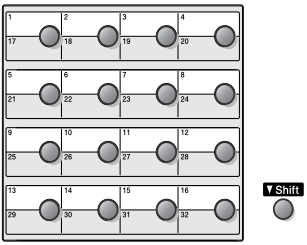

One-Touch keys are the 16 keys (numbers 01–32) located on the left side of the control panel.

1. Press **Menu**, **2**, **3**, **1**.

```
Set Quick-Dial
1.One-Touch Dial
```

2. Press the One-Touch key where you want to store a number.

   If you have not installed the optional LAN board (NC-9100h), go to Step 4.

   —OR—

   If you have installed the optional LAN board (NC-9100h), the MFC will ask you if the One-Touch key is for a fax/telephone number or an E-mail address. Go to Step 3.

3 Press ▲ or ▼ to select `Fax/Tel` (or `E-Address`).

```
One-Touch Dial
Fax/Tel
```

Press **Set**.

4 Enter the phone or fax number (up to 20 digits).

Press **Set**.

—**OR**—

If you purchased the optional NC-9100h, you can select `E-Address` in Step 3 and press **Set**.

- If you want to enter a pause in the dialling sequence (for example, to access an outside line), press **Redial/Pause** as you are entering the digits.
  Each key press of **Redial/Pause** enters a 3.5 second pause when the number is dialled, displayed by a dash on the screen.

5 Use the dial pad to enter the name (up to 15 characters).

Press **Set**.

(You can use the chart on page 4-3 to help you enter letters.)

—**OR**—

Press **Set** to store the number without a name.

6 Go to Step 2 to store another One-Touch number.

—**OR**—

Press **Stop/Exit**.

When you dial an auto dial number, the LCD shows the name and number you have stored, or, if you have not stored a name, only the number you have stored.

Storing Speed-Dial numbers

You can store Speed-Dial numbers, so that when you dial you will only have to press a few keys (**Search/Speed Dial**, **#**, the three-digit number, and **Start**). The MFC can store 300 Speed-Dial numbers.

1 Press **Menu**, **2**, **3**, **2**.

```
Set Quick-Dial
2.Speed-Dial
```

2 Use the dial pad to enter a three-digit Speed-Dial location number (001-300).

(For example, press **005**.)

Press **Set**.

If you have not installed the optional LAN board (NC-9100h), go to Step 4.

—**OR**—

If you have installed the optional LAN board (NC-9100h), the MFC will ask you if the Speed-Dial is for a fax/telephone number or an E-mail address. Go to Step 3.

3 Press ▲ or ▼ to select `Fax/Tel`.

```
Speed-Dial
Fax/Tel
```

Press **Set**.

4 Enter the phone or fax number (up to 20 digits).

Press **Set**.

—**OR**—

If you purchased the optional NC-9100h, you can select `E-Address` in Step 3 and press **Set**.

5 Use the dial pad to enter the name (up to 15 characters).

Press **Set**.

(You can use the chart on page 4-3 to help you enter letters.)

—**OR**—

Press **Set** to store the number without a name.

6 Go to Step 2 to store another Speed-Dial number.

—**OR**—

Press **Stop/Exit**.

Changing One-Touch and Speed-Dial numbers

If you try to store a One-Touch or Speed-Dial number where a number has already been stored, the LCD will show the name that has been stored there (or number) and will ask you to do one of the following:

1. Press **1** to change the stored number.

```
#005:MIKE
1.Change  2.Exit
```

   —**OR**—

   Press **2** to exit without making a change.

2. Enter a new number.

   Press **Set**.

   - To erase the whole number or whole name, press **Clear/Back** repeatedly until all digits or letters are deleted.

     To erase one digit or letter, use ◄ or ► to position the cursor under it, and then press **Clear/Back**.
   - If you want to insert characters, use ◄ or ► to position the cursor where you want to insert them, and then type.

3. Follow the directions beginning at Step 6 in Storing One-Touch Dial numbers and Storing Speed-Dial numbers. (See *Storing One-Touch Dial numbers* on page 7-1 and *Storing Speed-Dial numbers* on page 7-3.)

Setting up Groups for Broadcasting

Groups, which can be stored on a One-Touch key or a Speed-Dial location, allow you to send the same fax message to many fax numbers by pressing only a One-Touch key and **Start** or **Search/Speed Dial**, **#**, the three-digit location and **Start**.

First, you will need to store each fax number as a One-Touch or Speed-Dial number. Then, you can combine them into a Group, *Each Group uses up a One-Touch key or a Speed-Dial location.* Finally, you can have up to six small Groups, or you can assign up to 331 numbers to one large Group.

(See *Storing Speed-Dial numbers* on page 7-3 and *Changing One-Touch and Speed-Dial numbers* on page 7-4.)

1. Press **Menu**, **2**, **3**, **3**.

```
Set Quick-Dial
3.Setup Groups
```

2. Decide where you wish to store the Group.

   —AND—

   Press a One-Touch key.

   —OR—

   Press **Search/Speed Dial** and enter the three-digit location, and then press **Set**.

   (For example, press One-Touch key 2 for Group 1.)

3. Use the dial pad to enter the Group number.

```
Setup Groups
Setup Group:G01
```

   Press **Set**.

   (For example, press **1** for Group 1.)

4. To include One-Touch or Speed-Dial numbers in the Group, enter them as if you were dialling.

   For example, for One-Touch key 05, press One-Touch key **05**. For Speed-Dial location 009, press **Search/Speed Dial**, then press **009** on the dial pad. The LCD shows ✳005, #009.

5. Press **Set** to accept the numbers for this Group.

6 Use the dial pad and the chart on page 4-3 to enter a name for the Group.

Press **Set**.

(For example, `NEW CLIENTS`)

7 Press **Stop/Exit**.

You can print a list of all One-Touch and Speed-Dial numbers. (See *Printing reports* on page 9-3.) Group numbers will be marked in the column of 'Group'.

Dialling operations

You can use the MFC to make voice telephone calls by dialling manually or by using Search, One-Touch Dial or Speed-Dial memory. (For instructions, see *How to dial* on page 6-1.) You can use the handset of the external telephone to make and receive calls.

When you dial a Quick-Dial number, the LCD shows the name you have stored, or if you have not stored a name, the fax number you have stored.

Access codes and credit card numbers

Sometimes you may want to choose from several long distance carriers when you make a call. Rates may vary depending on the time and destination. To take advantage of low rates, you can store the access codes or long-distance carriers and credit card numbers as One-Touch and Speed-Dial numbers. You can store these long dialling sequences by dividing them and setting them up on separate keys in any combination. You can even include manual dialling using the dial pad.

The combined number will be dialled in the order that you entered it as soon as you press **Start**.
(See *Storing One-Touch Dial numbers* on page 7-1.)

For example, you can store ‘555’ on One-Touch key 03 and ‘7000’ on One-Touch key 02. If you press One-Touch key **03**, One-Touch key **02**, and **Start**, you will dial ‘555-7000’.

To temporarily change a number, you can substitute part of the number with manual dialling using the dial pad.

For example, to change the number to 555-7001 you could press One-Touch key **03** and then press **7001** using the dial pad.

If you must wait for another dial tone or signal at any point in the dialling sequence, store a pause there in the number by pressing **Redial/Pause**. Each key press adds a 3.5-second delay.

Pause

Press **Redial/Pause** to insert a 3.5-second pause between numbers. If you are dialling overseas, you can press **Redial/Pause** as many times as needed to increase the length of the pause.

Tone or Pulse

If you have a Pulse dialling service, but need to send Tone signals (for example, for telephone banking), follow the instructions below. If you have Touch Tone service, you will not need this feature to send tone signals.

1. Lift the handset of an external phone.
2. Press **#** on the control panel of your MFC. Any digits dialled after this will send tone signals.
3. When you hang up, the MFC will return to the Pulse dialling service.

Telephone (voice) operations

Making a telephone call

1. Pick up the handset of the external phone.
2. When you hear a dial tone, dial the call using the dial pad, One-Touch, Speed-Dial or Search.

To hang up, replace the handset of the external phone.

Using an external telephone

The easiest way to use your external telephone is to pick up the handset and dial the number on the external telephone as you normally would.

1. Pick up the handset of the external telephone.
2. Dial the number.
3. To hang up, replace the handset.

8 Remote Fax Options

You can only use one remote fax option at a time:
Fax Forwarding—OR—Fax Storage—OR—Off.

You can change your selection at any time (**Menu**, **2**, **5**, **1**).

If you have set Fax Forwarding or Fax Storage, a backup copy will automatically be printed at the MFC.

Programming a Fax Forwarding number

When Fax Forwarding is selected, your MFC stores the received fax in the memory. Then it dials the fax number you have programmed and forwards the fax message.

```
Remote Fax Opt
1.Forward/Store
```

1. Press **Menu**, **2**, **5**, **1**.
2. Press ▲ or ▼ to select `Fax Forward`.

   Press **Set**.

   The LCD will ask you to enter the fax number to which faxes will be forwarded.
3. Enter the forwarding number (up to 20 digits).

   Press **Set**.
4. Press **Stop/Exit**.

Setting Fax Storage

If you select Fax Storage, you will be able to retrieve fax messages from another location using the Remote Retrieval commands.

```
Remote Fax Opt
1.Forward/Store
```

1. Press **Menu**, **2**, **5**, **1**.
2. Press ▲ or ▼ to select `Fax Storage`.

   Press **Set**.
3. Press **Stop/Exit**.

If there are faxes in the memory when you select `Off` in **Menu**, **2**, **5**, **1**, the LCD will ask if you want to erase the faxes in the memory:

- If you press **1**, all fax data is erased and Fax Forwarding or Fax Storage is turned off.
- If you press **2**, faxes are not erased and Fax Storage stays on.

(See *Printing a fax from the memory* on page 5-8.)

If there is a power failure, you will not lose the faxes. They will remain in the memory for up to 4 days.

Setting your Remote Access Code

The remote access code lets you access the Remote Retrieval features when you are away from your MFC. Before you use the remote access and retrieval features, you have to set up your own code. The default code is an inactive code (---✳).

```
Remote Fax Opt
2.Remote Access
```

1. Press **Menu**, **2**, **5**, **2**.
2. Enter a three-digit code using numbers **0**-**9**, ✳ or **#**.

   Press **Set**. (The preset '✳' cannot be changed.)

   Do not use the same digits that appear in your Remote Activation Code (✳**51**) or Deactivation Code (**#51**). (See *Operation from extension telephones* on page 5-9.)

3. Press **Stop/Exit**.

You can change your code at any time by entering a new one. If you want to make your code inactive, press **Clear/Back** in Step 2 to restore the inactive setting (---✳).

Remote Retrieval

You can call your MFC from any telephone or fax machine using touch tone, then use the Remote Access Code and remote commands to retrieve fax messages. Be sure to cut out the Remote Retrieval Access Card on the last page and keep it with you at all times.

Using your Remote Access Code

1. Dial your fax number from a telephone or another fax machine using touch tone.
2. When your MFC answers, immediately enter your Remote Access Code (3 digits followed by ✳).
3. The MFC signals if it has received fax messages:

   1 long beep — Fax messages

   No beeps — No fax messages
4. The MFC gives two short beeps, which tells you to enter a command. The MFC will hang up if you wait longer than 30 seconds to enter a command. The MFC will beep three times, if you enter an invalid command.
5. Press **90** to reset the MFC when you have finished.
6. Hang up.

Remote commands

Follow the commands below to access features when you are away from the MFC. When you call the MFC and enter your Remote Access Code (3 digits followed by ✳), the system will give two short beeps and you must enter a remote command.

Remote commands		Operation details
95	**Change the Fax Forwarding or Fax Storage settings**	
	1 Off	You can select `Off` after you have retrieved or erased all your messages.
	2 Fax Forwarding	If you hear one long beep, the change has been accepted. If you hear three short beeps, you cannot change it because the conditions have not been met. You can register your Fax Forwarding number by entering 4. (See *Changing your Fax Forwarding number* on page 8-6.) Once you have registered the number, Fax Forwarding will work. You can select `Off` after you have retrieved or erased all your messages.
	4 Fax Forwarding number	
	6 Fax Storage	
96	**Retrieve a fax**	
	2 Retrieve all faxes	Enter the number of a remote fax machine to receive stored fax messages. (See *Retrieving fax messages* on page 8-6.)
	3 Erase faxes from the memory	If you hear one long beep, you can erase fax messages from the memory.
97	**Check the receiving status**	
	1 Fax	You can check whether your MFC has received any faxes. If it has, you will hear one long beep. If not you will hear three short beeps.
98	**Change the Receive Mode**	
	1 External TAD	If you hear one long beep, you can change the Receive Mode.
	2 Fax/Tel	
	3 Fax Only	
90	**Exit**	After a long beep, you can exit Remote Retrieval.

Retrieving fax messages

1. Dial your fax number.
2. When your MFC answers, immediately enter your Remote Access Code (3 digits followed by ✳). If you hear one long beep, you have messages.
3. As soon as you hear two short beeps, use the dial pad to press **962**.
4. Wait for the long beep, and then use the dial pad to enter the number of the remote fax machine where you want your fax messages sent to followed by **##** (up to 20 digits).

You cannot use ✳ and **#** as dial numbers. However, press **#** if you want to store a pause.

5. Hang up after you hear your MFC beep. Your MFC will call the other machine, which will then print your fax messages.

Changing your Fax Forwarding number

You can change the default setting of your fax forwarding number from another telephone or fax machine using touch tone.

1. Dial your fax number.
2. When your MFC answers, immediately enter your Remote Access Code (3 digits followed by ✳). If you hear one long beep, you have messages.
3. When you hear two short beeps, use the dial pad to press **954**.
4. Wait for the long beep, and then use the dial pad to enter the new number of the remote fax machine where you want your fax messages forwarded followed by **##** (up to 20 digits).

You cannot use ✳ and **#** as dial numbers. However, press **#** if you want to store a pause.

5. Hang up after you hear your MFC beep.

9 Printing reports

Fax settings and activity

You need to set up the Transmission Verification Report and Fax Journal Period in the menu table.

Press **Menu**, **2**, **4**, **1**.

```
Report Setting
1.XMIT Report
```

—OR—

Press **Menu**, **2**, **4**, **2**.

```
Report Setting
2.Journal Period
```

Customizing the Transmission Verification Report

You can use the Transmission Report as proof that you sent a fax. This report lists the time and date of transmission and whether the transmission was successful (OK). If you select `On` or `On+Image`, the report will print for every fax you send.

If you send a lot of faxes to the same place, you may need more than the job numbers to know which faxes you must send again. Selecting `On+Image` or `Off+Image` will print a section of the fax's first page on the report to help you remember.

When the feature is `Off`, the Report will only print if there is a transmission error. (NG).

1. Press **Menu**, **2**, **4**, **1**.
2. Press ▲ or ▼ to select `Off`, `Off+Image`, `On` or `On+Image`.
   Press **Set**.
3. Press **Stop/Exit**.

```
XMIT Report
On+Image
```

Setting the Journal Period

You can set the MFC to print a Journal at specific intervals (every 50 faxes, 6, 12 or 24 hours, 2 or 7 days). If you set the interval to `Off`, you can print the report by following the Steps on the next page.

The default setting is `Every 50 Faxes`.

```
Report Setting
2.Journal Period
```

```
Journal Period
Every 50 Faxes
```

1. Press **Menu**, **2**, **4**, **2**.
2. Press ▲ or ▼ to choose an interval. Press **Set**.

   (If you choose 7 days, the LCD will ask you to choose a day on which to begin the 7-day countdown.)
3. Enter the time to begin printing in 24-hour format.

   Press **Set**.

   (For example: enter 19:45 for 7:45 PM.)
4. Press **Stop/Exit**.

If you select 6, 12, 24 hours, 2 or 7 days, the MFC will print the report at the selected time and then erase all jobs from its memory. If the MFC's memory becomes full with 200 jobs before the time you selected has passed, the MFC will print the Fax Journal early and then erase all jobs from memory. If you want an extra report before it is due to print, you can print it without erasing the jobs from memory.

If you select `Every 50 Faxes`, the MFC will print the Fax Journal when the MFC has stored 50 jobs.

Printing reports

Five reports are available:

1.Help List	Prints the Help List so you can see at-a-glance how to quickly program your MFC.
2.Quick-Dial	Lists names and numbers stored in the One-Touch and Speed-Dial memory, in numerical order.
3.Journal	Lists information about the last incoming and outgoing faxes. (TX means Transmit.) (RX means Receive.)
4.XMIT Verify	Prints a Transmission Verification Report for your last transmission.
5.System Setup	Lists your settings.
6.Order Form	You can print an accessories order form to fill out and send to Brother dealer.

How to print a report

1. Press **Menu**, **5**.
2. Press ▲ or ▼ to select the report you want.
   Press **Set**.
   —OR—
   Enter the number of the report you want to print.
   For example, press **1** to print the Help List.
3. Press **Start**.

10 Making copies

Using the MFC as a copier

You can use your MFC as a copier, making up to 99 copies at a time.

Enter Copy mode

Before making copies, make sure that (**Copy**) is illuminated in green. If it is not, press (**Copy**) to enter **Copy** mode. The default setting is Fax. You can change the number of seconds or minutes that the MFC stays in Copy mode after a copy operation. (See *Setting the Mode Timer* on page 4-6.)

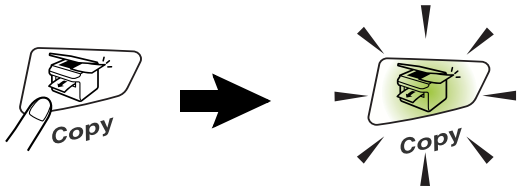

The printable area of your MFC begins at approximately 2 mm from the both ends and 3 mm from the top or bottom of the paper.

Ex: A4 (Document) → A4 (Paper)

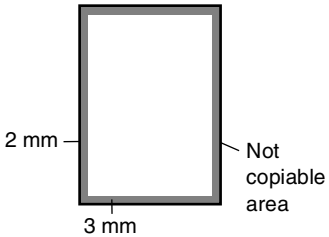

While the MFC is copying, incoming faxes will be received into the memory instead of being printed.

Making a single copy

1. Press (**Copy**) to illuminate it in green. Place the original document face down in the ADF.
2. Press **Start**.

   Do **NOT** pull on the original document while copying is in progress.

To stop copying and eject the original document, press **Stop/Exit**.

Making multiple copies

1. Press (**Copy**) to illuminate it in green. Place the original document face down in the ADF.
2. Use the dial pad to enter the number of copies you want (up to 99).
3. Press **Start**.

To sort the copies, press the **Options** key. (See *Sorting copies* on page 10-11.)

Out of Memory message

If the memory becomes full while you are making copies, the LCD message will guide you through the next step.

```
Out of Memory
```

If the `Out of Memory` message appears, press **Stop/Exit** to cancel or **Start** to copy scanned pages. You will need to clear some jobs from the memory before you can continue.

To gain extra memory, you can turn off Fax Storage. (See *Setting Fax Storage* on page 8-2.)

—OR—

Print the faxes that are in the memory. (See *Printing a fax from the memory* on page 5-8.)

When you get an `Out of Memory` message, you may be able to make copies if you first print incoming faxes in the memory to restore the memory to 100%.

Then if this error message appears more than once you may wish to consider increasing the memory size. For more information on how to increase the memory size, see *Memory board* on page 13-1.

Using the Copy keys (Temporary settings)

When you want to change the settings only for the next copy, use the Temporary Copy Keys.

You can improve your copies by using the Temporary Copy Keys: **Enlarge/Reduce**, **Contrast**, **Quality**, and **Options**. These settings are *temporary*, and the MFC returns to Fax mode 1 minute after it finishes copying. If you want to use these temporary settings again, place the next original document in the ADF within that time. However, if you have set the Mode Timer for Copy and Scan modes 0 to 30 seconds, the MFC returns to the default settings after the number of seconds that has been set for Mode Timer. (See *Setting the Mode Timer* on page 4-6.)

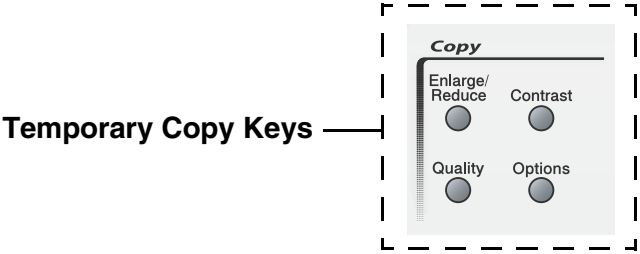

Enlarge/Reduce

You can select the following enlargement or reduction ratios.

`Auto` sets the MFC to calculate the reduction ratio that fits the size of your paper.

`Custom(25 - 400%)` allows you to enter a ratio from 25% to 400%.

Press **Enlarge/Reduce**.	100%
	104% (EXE → LTR)
	141% (A5 → A4)
	200%
	Auto
	Custom(25 - 400%)
	50%
	70% (A4 → A5)
	78% (LGL → LTR)
	83% (LGL → A4)
	85% (LTR → EXE)
	94% (A4 → LTR)
	97% (LTR → A4)

1. Press (**Copy**) to illuminate it in green. Place the original document face down in the ADF.
2. Use the dial pad to enter the number of copies you want (up to 99).
3. Press **Enlarge/Reduce**.

4 Press ▲ or ▼ to select the enlargement or reduction ratio you want.

Press **Set**.

—**OR**—

You can select `Custom(25 - 400%)` and press **Set**.

Use the dial pad to enter an enlargement or reduction ratio from `25%` to `400%`.

Press **Set**.

(For example, press **5 3** to enter `53%`.)

5 Press **Start**.

—**OR**—

Press other temporary copy keys for more settings.

Page layout Copy Options (2in1, 4in1 (P) or 4in1 (L)) are not available with **Enlarge/Reduce**.

Quality (type of original document)

You can select the Quality for your type of original document. The default setting is `Auto`.

1. Press (**Copy**) to illuminate it in green. Place the original document face down in the ADF.
2. Use the dial pad to enter the number of copies you want (up to 99).
3. Press **Quality**.
4. Press or to choose the type of original document (`Auto`, `Text` or `Photo`).

   Press **Set**.
5. Press **Start**.

   —OR—

   Press other Temporary Copy keys for more settings.

`Auto`:	Suitable for original documents that contain both text and photographs.
`Text`:	Suitable for original documents containing only text.
`Photo`:	Suitable for copying photographs.

Contrast

You can adjust copy contrast to make copies darker or lighter.

1. Press (**Copy**) to illuminate it in green. Place the original document face down in the ADF.
2. Use the dial pad to enter the number of copies you want (up to 99).
3. Press **Contrast**.
4. Press to make a copy darker.

   —**OR**—

   Press to make a copy lighter.

   Press **Set**.
5. Press **Start**.

   —**OR**—

   Press other Temporary Copy keys for more settings.

Options

Use the **Options** key to set the following copy settings only for the next copy.

Press Copy Options	Menu Selections ▲▼ select + Set	Options ▲▼ select + Set	Factory Setting	Page
Options	Page Layout	Off(1 in 1) 2 in 1 4 in 1 (P) 4 in 1 (L)	Off (1 in 1)	10-10
	Stack/Sort	Stack Sort	Stack	10-11

After you choose your settings by pressing **Set**, the LCD shows `Press Start`.

Press **Start** if you're finished choosing settings.

—OR—

Press **Options** again or other Temporary Copy Keys for more settings.

N in 1 copy (Page Layout)

You can save paper by copying either two or four pages onto one page. Please make sure paper size is set to A4, Letter or Legal.

1. Press (**Copy**) to illuminate it in green. Place the original document face down in the ADF.
2. Use the dial pad to enter the number of copies you want (up to 99).
1. Press **Options** and or to select `Page Layout`. Press **Set**.
2. Press or to select `2 in 1`, `4 in 1 (P)`, `4 in 1 (L)`, (or `Off (1 in 1)`). Press **Set**.
3. Press **Start** to scan the original document.

- (`P`) means Portrait and (`L`) means Landscape.
- For `2 in 1`, `4 in 1` (`P`) or `4 in 1` (`L`), you cannot use the Enlarge/Reduce setting.

2 in 1

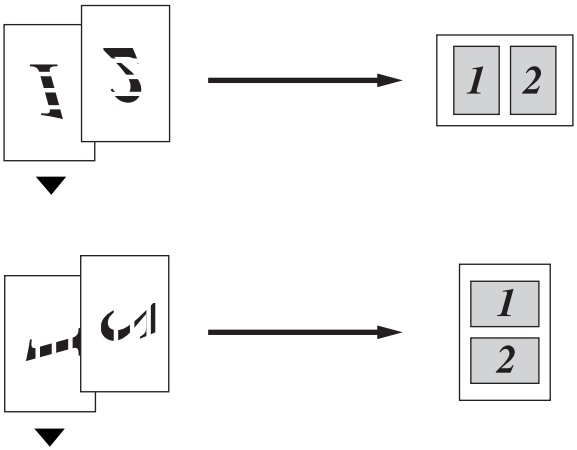

4 in 1 (P)

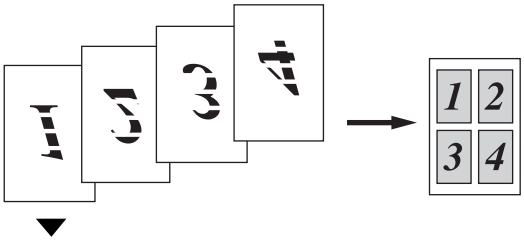

4 in 1 (R)

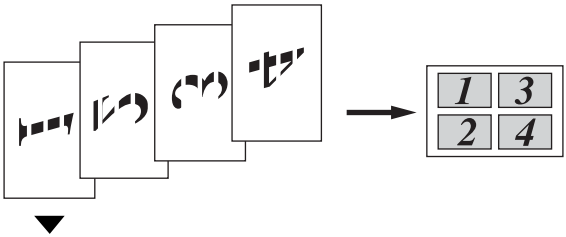

Sorting copies

You can sort multiple copies. Pages will be printed in the order 123, 123, 123, and so on.

1. Press (**Copy**) to illuminate it in green. Place the original document face down in the ADF.
2. Use the dial pad to enter the number of copies you want (up to 99).
3. Press **Options** and or to select `Stack/Sort`.
   Press **Set**.
4. Press or to select `Sort`.
   Press **Set**.
5. Press **Start**.
   —**OR**—
   Press **Options** again or other Temporary Copy Keys for more settings.

Changing the default copy settings

You can adjust the copy settings. These settings will stay until you change them again.

Quality

```
Quality
Auto
```

1. Press **Menu**, **3**, **1**.
2. Press ▲ or ▼ to select `Text`, `Photo` or `Auto`.
   Press **Set**.
3. Press **Stop/Exit**.

Contrast

You can change the contrast to help an image look lighter or darker.

```
Contrast
      -□□■□□+
```

1. Press **Menu**, **3**, **2**.
2. Press ▲ to make darker.

   —OR—

   Press ▼ to make lighter.

   Press **Set**.
3. Press **Stop/Exit**.

11 Important information

IEC 60825 Specification

This machine is a Class 1 laser product as defined in IEC 60825 specifications. The label shown below is attached in countries where required.

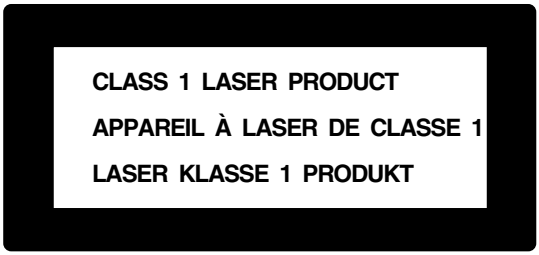

This machine has a Class 3B Laser Diode which emits invisible laser radiation in the Scanner Unit. The Scanner Unit should not be opened under any circumstances.

Laser Diode

Wave length:	760 - 810 nm
Output:	5 mW max.
Laser Class:	Class 3B

Caution

Use of controls, adjustments or performance of procedures other than those specified in this manual may result in hazardous radiation exposure.

For Finland and Sweden

LUOKAN 1 LASERLAITE

KLASS 1 LASER APPARAT

Varoitus! Laitteen käyttäminen muulla kuin tässä käyttöohjeessa mainitulla tavalla saattaa altistaa käyttäjän turvallisuusluokan 1 ylittävälle näkymättömälle lasersäteilylle.

Varning – Om apparaten används på annat sätt än i denna Bruksanvisning specificerats, kan användaren utsättas för osynlig laserstrålning, som överskrider gränsen för laserklass 1.

For your safety

To ensure safe operation the supplied three-pin plug supplied must be inserted only into a standard three-pin power point that is effectively grounded through the normal household wiring.

The fact that the equipment operates satisfactorily does not imply that the power is grounded and that the installation is completely safe. For your safety, if in any doubt about the effective grounding of the power, call a qualified electrician.

Disconnect device

This product must be installed near a grounded socket outlet that is easily accessible. In case of emergencies, you must disconnect the power cord from the socket outlet in order to shut off power completely.

IT power system (Norway only)

This product is also designed for IT power system with phase to phase voltage 230V.

LAN connection

Caution: Connect this product to a LAN connection that is not subjected to overvoltages.

International ENERGY STAR® Compliance Statement

The purpose of the International ENERGY STAR® Program is to promote the development and popularization of energy-efficient office equipment.

As an ENERGY STAR® Partner, Brother Industries, Ltd. has determined that this product meets the ENERGY STAR® guidelines for energy efficiency.

Radio interference (220-240V Model only)

This product complies with EN55022 (CISPR Publication 22)/Class B.Before this product is used, ensure that you use the following interface cables.

1. A shielded parallel interface cable with twisted-pair conductors and that it is marked "IEEE 1284 compliant". The cable must not exceed 2.0 meters in length.
2. A USB cable. The cable must not exceed 2.0 metres in length.

Important safety instructions

1. Read all of these instructions.
2. Save them for later reference.
3. Follow all warnings and instructions marked on the product.
4. Switch off and unplug the power cord before cleaning. Do not use liquid or aerosol cleaners. Use a damp cloth for cleaning.
5. Do not use this product near water.
6. Do not place this product on an unstable cart, stand, or table. The product may fall, causing serious damage to the product.
7. Slots and openings in the cabinet and the back or bottom are provided for ventilation; to ensure reliable operation of the product and to protect it from overheating, these openings must not be blocked or covered. The openings should never be blocked by placing the product on a bed, sofa, rug, or other similar surface. This product should never be placed near or over a radiator or heater. This product should never be placed in a built-in installation unless proper ventilation is provided.
8. This product should be operated from the type of power source indicated on the label. If you are not sure of the type of power available, call your dealer or local power company.

   Use only the power cord supplied with this MFC.
9. This product is equipped with a 3-wire grounded plug, a plug having a third (grounded) pin. This plug will only fit into a grounded power outlet. This is a safety feature. If you are unable to insert the plug into the outlet, call your electrician to replace your obsolete outlet. Do not defeat the purpose of the grounded plug.
10. Do not allow anything to rest on the power cord. Do not place this product where people can walk on the cord.
11. Do not place anything in front of the MFC that will block received faxes. Do not place anything in the path of received faxes.

12 Wait until pages have exited the MFC before picking them up.

13 Unplug this product from the wall outlet and refer servicing to Authorized Service Personnel under the following conditions:

- When the power cord is damaged or frayed.
- If liquid has been spilled into the product.
- If the product has been exposed to rain or water.
- If the product does not operate normally when the operating instructions are followed. Adjust only those controls that are covered by the operating instructions. Improper adjustment of other controls may result in damage and will often require extensive work by a qualified technician to restore the product to normal operation.
- If the product has been dropped or the cabinet has been damaged.
- If the product exhibits a distinct change in performance, indicating a need for service.

14 To protect your product against power surges, we recommend the use of a power protection device (Surge Protector).

15 To reduce the risk of fire, electric shock and injury to persons, note the following:

- Do not use this product near appliances that use water, a swimming pool or in a wet basement.
- Do not use the MFC's telephone during an electrical storm (there is the remote possibility of an electrical shock) or to report a gas leak in the vicinity of the leak.
- Use only the power cord indicated in this guide.

Trademarks

The Brother logo is a registered trademark of Brother Industries, Ltd.

Brother is a registered trademark of Brother Industries, Ltd.

Multi-Function Link is a registered trademark of Brother International Corporation.

© Copyright 2004 Brother Industries, Ltd. All rights reserved.

Windows, Microsoft and Windows NT are registered trademarks of Microsoft in the U.S. and other countries.

Macintosh and QuickDraw are trademarks or registered trademarks of Apple Computer, Inc.

Postscript and Postscript Level 3 are registered trademarks or trademarks of Adobe Systems Incorporated.

PaperPort and TextBridge are registered trademarks of ScanSoft, Inc.

Presto! PageManager is a registered trademark of NewSoft Technology Corporation.

Each company whose software title is mentioned in this guide has a Software License Agreement specific to its proprietary programs.

All other brand and product names mentioned in this User's Guide are registered trademarks of their respective companies.

Shipment of the MFC

If for any reason you must ship your MFC, carefully package the MFC to avoid any damage during transit. We recommend that you save and use the original packaging. The MFC should also be adequately insured with the carrier.

12 Troubleshooting and routine maintenance

Troubleshooting

Error messages

As with any sophisticated office product, errors may occur. If this happens, your MFC identifies the problem and displays an error message. The most common error messages are shown below.

ERROR MESSAGES		
ERROR MESSAGE	**CAUSE**	**ACTION**
`BT Call Sign On`	The machine is set BT Call Sign to `On`. You cannot change the Receive Mode from `Manual` to another mode.	Set BT Call Sign to `Off`. (See *BT Call Sign (U.K. only)* on page 5-14.)
`Change Drum Soon`	The drum unit is near the end of its life.	Use the drum unit until you have a print quality problem; then replace the drum unit with a new one.
	The drum counter was not reset.	If LCD still shows this message after replacing the drum unit with new one, follow the steps below. 1. Open the front cover, and then press **Clear/Back**. 2. Press **1** to reset.
`Check Original`	The original documents were not inserted or fed properly, or original document scanned from ADF was longer than about 90 cm.	See *Original document jams* on page 12-4.

`Check Paper`
`Check Paper #1`
`Check Paper #2`
	The MFC is out of paper or paper is not properly loaded in the paper tray.
	—**OR**—
	The paper is jammed in the MFC.
		Refill the paper in the paper tray.
		—**OR**—
		Remove the paper and load it again.
		See *Paper jams* on page 12-5.

`Check Paper Size`	When you see this error, the paper in the paper tray does not match the paper size you set in **Menu**, **1**, **3**.	Load the appropriate size paper or change the default setting. (See *Setting the Paper Size* on page 4-7.)

ERROR MESSAGES		
ERROR MESSAGE	**CAUSE**	**ACTION**
Comm.Error	Poor phone line quality caused communication error.	Try the call again. If problem continues, call Telephone Company to check your phone line.
Connection Fail	You tried to poll a fax machine that is not in Polled Waiting mode.	Verify the other party's polling setup.
Cooling Down Wait for a while	The temperature of the drum unit or toner cartridge is too hot. The MFC will pause its current print job and go into cooling down mode. During the cooling down mode, you will hear the cooling fan running while the display on the MFC shows Cooling Down, and Wait for a while.	Wait a while for the MFC to cool.
Cover Open Pls Close Cover	The front cover was not completely closed.	Close the front cover for the drum unit.
Disconnected	The other party or other party's fax machine terminated the call.	Try to transmit or receive again.
Error Scanning Turn off and on the machine, then try again.	The MFC cannot scan the original document correctly.	Please remove the original document from the ADF. Turn the MFC power on and off, and then try again.
Fuser Error Turn off and on. Leave the machine for 10 min.	The temperature inside of the MFC is too hot or too cool.	Turn the MFC power off and on again, and then leave the MFC for 10 minutes. If the LCD still shows Fuser Error or changes to Machine Error, call your Brother dealer or Brother Customer Service.
Fuser Open	The jam clear cover (fuser cover) is open.	Please close the jam clear cover (fuser cover). (See *Paper jams* on page 12-5.)
Machine Error XX	The MFC has a mechanical problem.	Call Brother or your dealer for service.
No Response/Busy	The number you dialled does not answer or is busy.	Verify the number and try again.

ERROR MESSAGES		
ERROR MESSAGE	**CAUSE**	**ACTION**
`Not Registered`	You tried to access a One-Touch or Speed-Dial number that is not programmed.	Set up the One-Touch or Speed-Dial number. (See *Storing One-Touch Dial numbers* on page 7-1 and *Storing Speed-Dial numbers* on page 7-3.)
`Out of Memory`	You can't store data in the memory.	(Fax sending in process) Press **Stop/Exit** and wait until the other operations in progress finish and then try again. —**OR**— Clear the data in the memory. (See *Out of Memory message* on page 10-3.) (Copy operation in process) Press **Stop/Exit** and wait until the other operations in process finish and then try again. —**OR**— Clear the data in the memory. (See *Out of Memory message* on page 10-3.) —**OR**— Add an optional memory board. (See *Memory board* on page 13-1.) (Printing operation in process) Reduce print resolution. (See *Print Quality on page 2-7 in Software User's Guide on the CD-ROM*.) —**OR**— Clear the data in the memory. (See *Out of Memory message* on page 10-3.) —**OR**— Add an optional memory. (See *Memory board* on page 13-1.)
`Paper Jam`	The paper is jammed in the MFC.	See *Paper jams* on page 12-5.

ERROR MESSAGES		
ERROR MESSAGE	**CAUSE**	**ACTION**
`Pls Open Cover`	A page, piece of paper or paper clip, etc. may be jammed inside the MFC.	Open the front cover and pull out the drum unit. If you see any jammed paper or other item, gently pull it out, reinsert the drum unit, then close the front cover. If the error message remains, open and close the front cover again. If the MFC cannot reset itself and return to the date and time prompt, it will display `Machine Error XX`. Then contact your Brother dealer for service.
`Toner Empty`	Toner cartridge is not installed. —**OR**— Toner is used up and printing is not possible.	Reinstall the toner cartridge. —**OR**— Replace the toner cartridge with a new one. (See *Replacing the toner cartridge* on page 12-25.)
`Toner Low`	If the LCD shows `Toner Low`, you can still print. But the toner is depleted and the MFC is telling you that the toner will soon run out.	Order a new toner cartridge now.

Original document jams

If the original document is jammed follow the steps below.

Original document was not inserted or fed properly, or was too long.

1. Open the control panel cover.
2. Carefully pull the original document toward the front of the MFC.

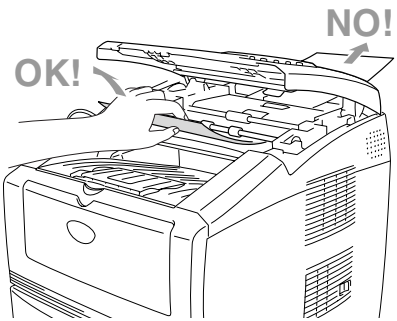

3. Close the control panel cover.
4. Press **Stop/Exit**.

Paper jams

To clear paper jams, please follow the steps in this section.

WARNING

Before you clear a paper jam, make sure you have switched off and unplugged the MFC. After you have just used the MFC, some parts inside the MFC are extremely hot. When you open the front cover or back output tray of the MFC, never touch the shaded parts shown in the following diagram.

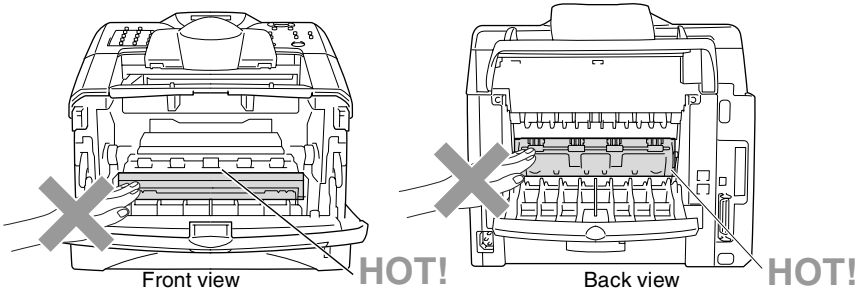

Front view

Back view

Clear the jammed paper as follows.

If the jammed paper is removed completely by using the information in the following steps, you can install the paper tray first, and then close the front cover and the MFC will resume printing automatically.

- If a paper jam occurs when using the optional lower tray unit, check for correct installation of the upper paper tray.
- Always remove all paper from the paper tray and straighten the stack when you add new paper. This helps prevent multiple sheets of paper from feeding through the MFC at one time and reduces paper jams.

1 Pull the paper tray completely out of the MFC.

2 Pull the jammed paper up and out of the MFC.

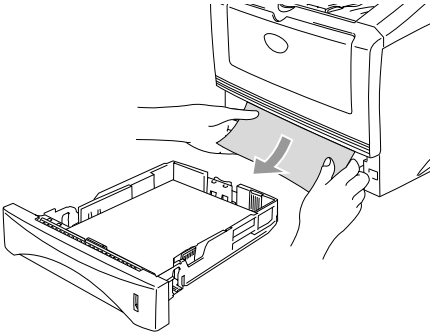

3 Press the cover release button and then open the front cover.

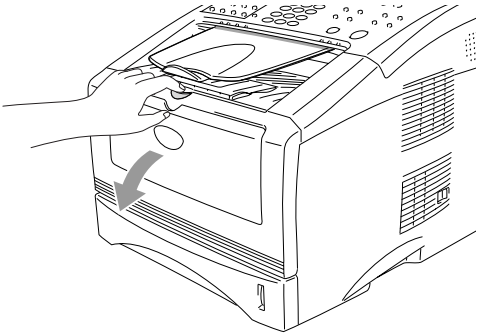

4 Pull out the drum unit and toner cartridge assembly. Pull the jammed paper up and out of the MFC. If you cannot remove the drum unit and toner cartridge assembly easily at this time, do not use extra force. Instead, pull the edge of the jammed paper out of the paper tray. If the jammed paper can not be pulled out easily, turn the jam dial towards you so that you gently pull the paper out.

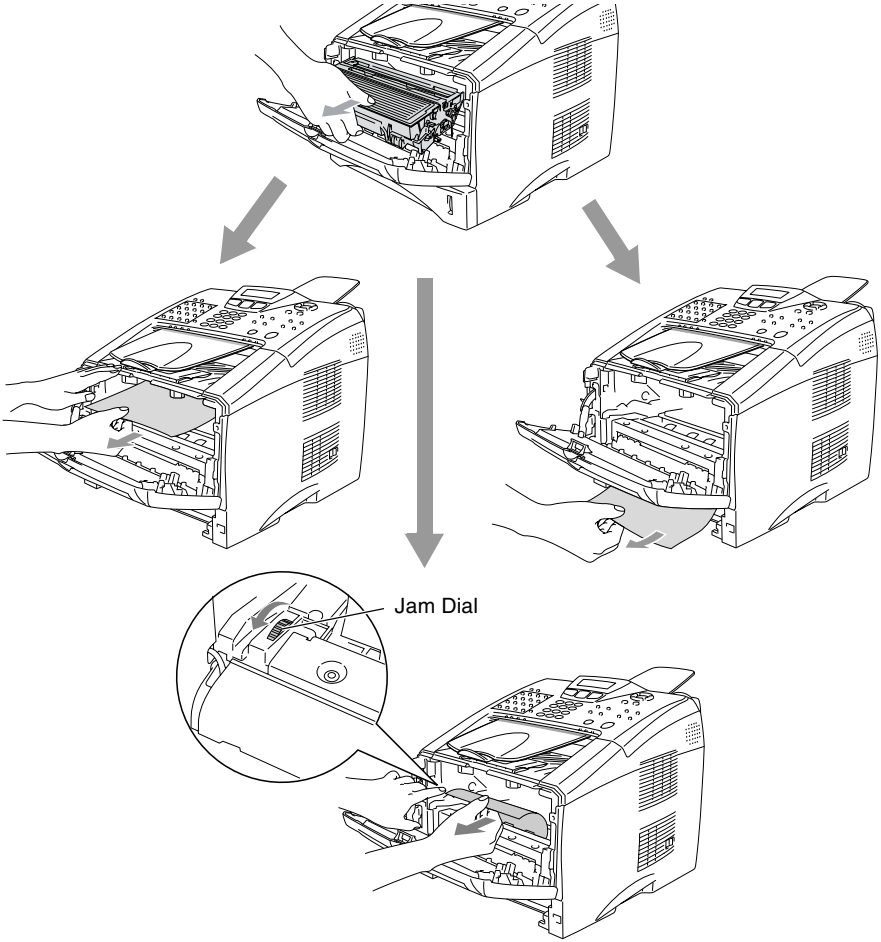

WARNING

To prevent damage to the MFC caused by static electricity, do not touch the electrodes shown in the following diagram.

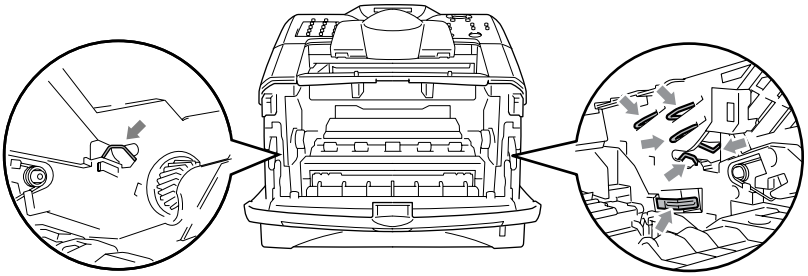

5 Open the back output tray. Pull the jammed paper out of the fuser unit. If the paper jam can be cleared, go to Step 7.

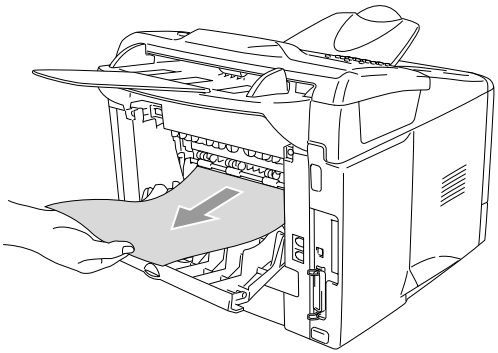

If you have to pull the paper toward the back of the MFC, the fuser may get dirty with toner powder and it may scatter on the next printouts. Print a few copies of the test page until the scattering of toner stops.

WARNING

After you have just used the MFC, some internal parts of the MFC are extremely **HOT!** Wait for the MFC to cool down before you touch the internal parts of the MFC.

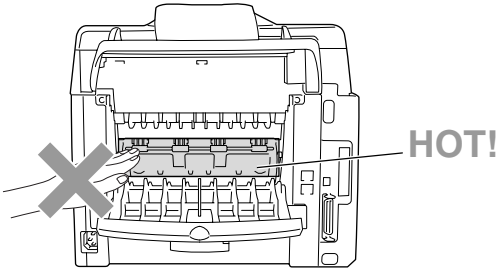

Back view

6 Open the jam clear cover (fuser cover). Pull the jammed paper out of the fuser unit.

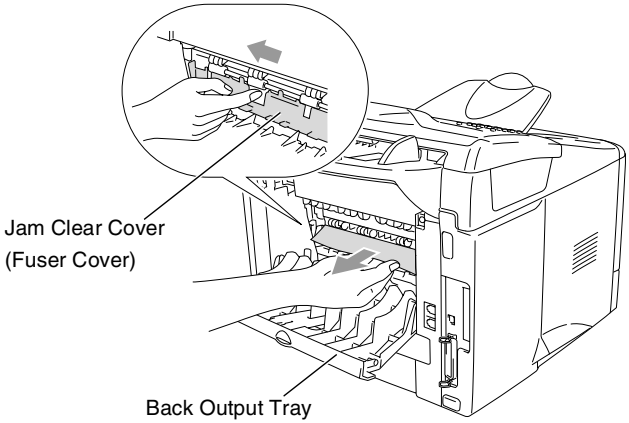

7 Close the jam clear cover (fuser cover). Close the back output tray.

8 Push the lock lever down and take the toner cartridge out of the drum unit. Take out the jammed paper if there is any inside the drum unit. Then put the toner cartridge back in the drum unit.

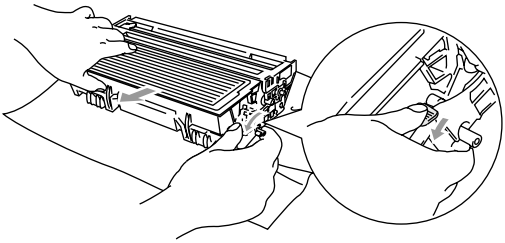

9 Put the drum unit and toner cartridge assembly back in the MFC.

10 Put the paper tray in the MFC.

11 Close the front cover.

If you are having difficulty with your MFC

If you think there is a problem with the way your faxes look, *make a copy first*. If the copy looks good, the problem is probably not your MFC. Check the chart below and follow the troubleshooting tips.

DIFFICULTY	SUGGESTIONS
Printing or Receiving Faxes	
Condensed print and horizontal streaks or the top and bottom of sentences are cut off.	If your copy looks good, you probably had a bad connection, with static or interference on the telephone line. If the copy looks bad, clean the scanner area. If there is still a problem, call Brother or your dealer for service.
Vertical black lines when receiving.	Sometimes you may see vertical streaks/black lines on the faxes you receive. Your MFC's primary corona wire for printing may be dirty, or the sending party's fax scanner may be dirty. Clean your primary corona wire. (See *Cleaning the drum unit* on page 12-24.) Ask the sender to make a copy to see if the problem is with the sending machine. Try receiving from another fax machine. If the problem continues call your dealer for service.
Horizontal streaks; lines are missing.	You may get a fax with horizontal streaks or with missing lines. Usually this is caused by a poor telephone connection. Ask the other party to send the fax again.
Received faxes appear as split or blank pages.	If the received data is divided and printed on two pages or if you get an additional blank page, make sure that auto reduction setting is turned `On`. (See *Printing a reduced incoming fax (Auto Reduction)* on page 5-6.)
Phone Line or Connections	
Dialling does not work	Check for a dial tone. Change `Tone/Pulse` setting. (See *Setting Tone or Pulse dialling mode (Excluding the Nordic Countries)* on page 4-13.) Check all line cord connections.
The MFC does not answer when called.	Make sure the MFC is in the correct receiving mode for your setup. (See *Choosing the Receive Mode* on page 5-1 and *To select or change your Receive Mode* on page 5-2.) Check for a dial tone. If possible, call your MFC to hear it answer. If there is still no answer, check the telephone line cord connection. If there is no ringing when you call your MFC, ask your telephone company to check the line.
Sending Faxes	
Poor sending quality.	Try changing your resolution to `Fine` or `S.Fine`. Make a copy to check your MFC's scanner operation. If copy quality is not good, clean the scanner. (See *Cleaning the scanner* on page 12-22.)
Transmission Verification Report says 'RESULT:NG' or 'RESULT:ERROR'.	There is probably temporary noise or static on the line. Try sending the fax again. If you send a PC FAX message and get 'RESULT:NG' or, on the Transmission Verification Report, your MFC may be out of memory. To gain extra memory, you can turn off Fax Storage (see *Setting Fax Storage* on page 8-2), print fax messages in memory (see *Polling* on page 5-11) or cancel a Delayed Fax or Polling Job (see *Cancelling a fax in progress* on page 6-9). If the problem continues, ask the telephone company to check your phone line.

DIFFICULTY	SUGGESTIONS
Vertical black lines when sending.	If the copy you made shows the same problem, your scanner is dirty. (See *Cleaning the scanner* on page 12-22.)
The other party does not receive my fax.	Send a manual fax so you can listen to make sure the other party's machine is answering. Lift the external handset and dial the number. Wait to hear fax receiving tones, and then press **Start**.
Handling Incoming Calls	
MFC 'Hears' Voice as CNG Tone.	If your MFC is set to Fax Detect `On`, it is more sensitive to sounds. Your MFC may mistakenly interpret certain voices or music on the line as a calling fax machine and respond with fax receiving tones. Deactivate the fax by pressing **Stop/Exit**. Try avoiding this problem by turning Fax Detect to `Off`. (See *Fax Detect* on page 5-5.)
Transferring a Fax Call to the MFC.	If you answered at the MFC, press **Start** and hang up immediately. If you answered on an external or extension phone, press your Remote Activation Code (default setting is (✳51). When your MFC answers, hang up.
Custom features on a single line.	If you have Call Waiting, Call Waiting/Caller ID, RingMaster, Voice Mail, an answering machine, an alarm system or other custom feature on a single phone line with your MFC, it may create a problem sending or receiving fax data.
Menu Setting Difficulties	
The MFC beeps when you try to access the `Setup Receive` and `Setup Send` menus.	Make sure that MFC is in Fax mode. If the Fax key is not illuminated, press it to turn on Fax mode. `Setup Receive` setting (**Menu**, **2**, **1**) and `Setup Send` setting (**Menu**, **2**, **2**) are available only when the MFC is in Fax mode.
Copy Quality Difficulties	
Vertical streaks appear in copies.	Sometimes you may see vertical streaks on your copies. Either the scanner or the primary corona wire for printing is dirty. Clean them both. (See *Cleaning the scanner* on page 12-22 and *Cleaning the drum unit* on page 12-24.)
Printer Difficulties	
The MFC does not print.	Check the following: • The MFC is plugged in and power switch turned on. • The toner cartridge and drum unit are installed properly. (See *Replacing the drum unit* on page 12-30.) • The interface cable is securely connected between the MFC and computer. (See the Quick Setup Guide.) • Check to see if LCD is showing an error message. (See *Error messages* on page 12-1.)
The MFC prints unexpectedly or it prints garbage.	Reset the MFC or turn it off and then on again. Check the primary settings in your application software to make sure it is set up to work with your MFC.

DIFFICULTY	SUGGESTIONS
The MFC prints first couple of pages correctly, then some pages have text missing.	Your computer is not recognizing the printer's input buffer full signal. Please make sure to connect the MFC cable correctly.
The MFC cannot print full pages of an original document. `Out of Memory` message occurs.	Reduce the printing resolution. Reduce the complexity of your original documents and try again. Reduce the graphic quality, the number of font sizes within your application software or add an optional memory. (See *Memory board* on page 13-1.)
My headers or footers appear when I view my document on the screen but do not appear when I print them.	Most laser printers have a restricted area that will not accept print. Usually these are the first two lines and last two lines, leaves 62 printable lines. Adjust the top and bottom margins in your document to allow for this.
Scanning Difficulties	
TWAIN errors appear while scanning.	Make sure the Brother TWAIN driver is selected as the primary source. In PaperPort®, click Scan in the File menu and select the Brother TWAIN driver.
Software Difficulties	
Cannot install software or print.	Run the **MFL-Pro Suite Repair and Install** program on the CD-ROM. This program will repair and reinstall the software.
Cannot perform '2 in 1 or 4 in 1' printing.	Check that the paper size setting in the application and in the printer driver are the same.
Cannot print when using Adobe Illustrator.	Try to reduce the print resolution.
When using ATM fonts, some characters are missing or some characters are printed in their place.	If you are using Windows® 95/98/98SE/Me, select 'Printer Settings' from the 'Start' menu. Select the properties of the 'Brother MFC-8220 or MFC-8220 (USB) Printer'. Click 'Spool Setting' on the 'Details' tab. Select 'RAW' from 'Spool Data Format'.
"Unable to write to LPT1" or "LPT1 already in use" Error Message appears. "MFC is Busy" or "MFC Connect Failure" Error Message appears.	1. Make sure the MFC is plugged in and power switch turned on and that it is connected directly to the computer using an IEEE-1284 bi-directional parallel cable. The cable must not go through another peripheral device (such as a Zip Drive, External CD-ROM Drive, or Switch box). 2. Make sure the MFC is not displaying an error message on the LCD Display. 3. Make sure no other device drivers, which also communicate through the parallel port, are running automatically when you boot up the computer (such as, drivers for Zip Drives, External CD-ROM Drive, etc.) Suggested areas to check: (*Load=, Run=command lines in the win.ini file or the Setup Group*) 4. Check with your computer manufacturer to confirm that the computer's parallel port settings in the BIOS are set to support a bi-directional machine; i.e. Parallel Port Mode – ECP
'MFC Connect Failure'	If the MFC is not connected to your PC and you have loaded the Brother software, the PC will show 'MFC Connect Failure' each time you restart Windows®. You can ignore this message or you can turn it off as follows. Double-click "\tool\WarnOFF.REG" from the supplied CD-ROM. The **Scan** key on the MFC's control panel will not work unless you restart your PC with the MFC connected. To turn it back on, double-click "\tool\WarnON.REG" from the supplied CD-ROM.

DIFFICULTY	SUGGESTIONS
Paper Handling Difficulties	
The MFC does not load paper. The LCD shows `Check Paper` or `Paper Jam`.	Check to see if the `Check Paper` or `Paper Jam` message appears on the LCD. If it is empty, load a new stack of paper into the paper tray. If there is paper in the paper tray, make sure it is straight. If the paper is curled, you should straighten it. Sometimes it is helpful to remove the paper, turn the stack over and put it back into the paper tray. Reduce the amount of paper in the paper tray, and then try again. Check that the manual feed mode is not selected in the printer driver.
The MFC does not feed paper from the manual feed tray.	Reinsert the paper firmly, load one sheet at a time. Make sure that manual feed mode is selected in the printer driver.
How can I load envelopes?	You can load envelopes from the manual feed tray. Your application software must be set up to print the envelope size you are using. This is usually done in the Page Setup or Document Setup menu of your software. Refer to your software application manual.
What paper can I use?	You can use plain paper, envelopes, transparencies and labels that are made for laser machines. (See *About paper* on page 2-1.)
How can I clear paper jams?	See *Paper jams* on page 12-5.
Print Quality Difficulties	
Printed pages are curled.	Thin or thick paper below the standard can cause this problem. Make sure you select the Paper Type that suits the media type you use. (See *Setting the Paper Type* on page 4-6 and *Media Type on page 2-4* in Software User's Guide on the CD-ROM.)
Printed pages are smeared.	The Paper Type setting may be incorrect for the type of print media you are using. —**OR**— The print media may be too thick or have a rough surface. (See *Setting the Paper Type* on page 4-6 and *Media Type on page 2-4* in Software User's Guide on the CD-ROM.)
Printouts are too light.	Set Toner Save mode to off in the Advance tab in the printer driver. (See *Toner Save Mode on page 2-7 in Software User's Guide on the CD-ROM.*)
Network Difficulties	
I cannot print over the Network	Make sure that your MFC is plugged into the AC power outlet and is online and in Ready mode. Press the Test switch. (See *Test switch* on page 13-9.) Then the current settings of the NC-9100h are printed.Verify that the cabling and Network connections are good. If possible, try connecting the MFC to a different port on your hub using a different cable. Check to see if there is any LED activity. The NC-9100h has a two color LED for diagnosing problems.

Improving the print quality

This section provides information on the following topics:

Examples of poor print quality	Recommendation
Faint	Check the printer's environment. Conditions such as humidity, high temperatures, and so on may cause this print fault. (See *Choosing a location* on page v.) If the whole page is too light, `Toner Save` mode may be on. Turn off `Toner Save` mode in the printer Properties tab of the driver. **—OR—** If your MFC is not connected to a computer, turn off `Toner Save` mode in the MFC itself. (See *Toner Save* on page 4-9.) Try installing a new toner cartridge. (See *Replacing the toner cartridge* on page 12-25.) Try installing a new drum unit. (See *Replacing the drum unit* on page 12-30.)
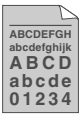 Gray background	Make sure that you use paper that meets the recommended specifications. (See *About paper* on page 2-1.) Check the printer's environment - high temperatures and high humidity can increase the amount of background shading. (See *Choosing a location* on page v.) Use a new toner cartridge. (See *Replacing the toner cartridge* on page 12-25.) Use a new drum unit. (See *Replacing the drum unit* on page 12-30.)
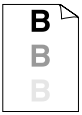 Ghost	Make sure you use paper that meets our specifications. Rough-surfaced paper or thick print media may cause this problem. Make sure that you choose the appropriate media type in the printer driver. (See *About paper* on page 2-1.) Try using a new drum unit. (See *Replacing the drum unit* on page 12-30.)
Toner specks	Make sure that you use paper that meets our specifications. Rough-surfaced paper may cause the problem. (See *About paper* on page 2-1.) The drum unit may be damaged. Put in a new drum unit. (See *Replacing the drum unit* on page 12-30.)
Hollow print	Make sure that you use paper that meets our specifications. (See *About paper* on page 2-1.) Choose **Thick paper** mode in the printer driver, or use thinner paper than you are currently using. Check the printer's environment because conditions such as high humidity can cause hollow print. (See *Choosing a location* on page v.)
All black	You may clear the problem by cleaning the primary corona wire inside the drum unit by sliding the blue tab. Make sure you return the blue tab to the home position (▲). (See *Cleaning the drum unit* on page 12-24.) The drum unit may be damaged. Put in a new drum unit. (See *Replacing the drum unit* on page 12-30.)

Examples of poor print quality	Recommendation
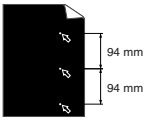 **White Spots on black text and graphics at 94 mm intervals** 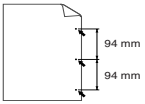 **Black Spots at 94 mm intervals**	If the problem is not solved after printing a few pages, the drum unit may have glue from label stock on the OPC drum surface. Clean the drum unit as follows: 1 Position the print sample in front of the drum unit, and find the exact position of the poor print. 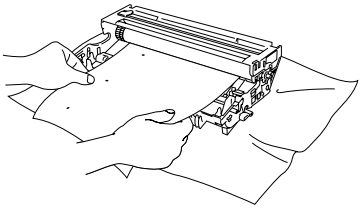 2 Turn the drum unit gear by hand while looking at the surface of the OPC drum. Do not touch the photosensitive drum with your fingers. 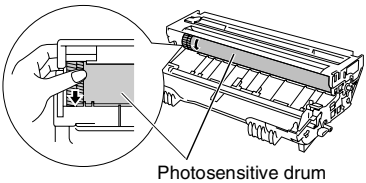 Photosensitive drum 3 When you have located the mark on the drum that matches the print sample, wipe the surface of the OPC drum with a cotton swab until the dust or paper powder on the surface comes off. 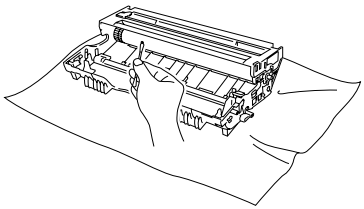 Do not try to clean the surface of the photosensitive drum with a sharp object. (e.g. ball-point pen, paper clip etc.) The drum unit may be damaged. Put in a new drum unit. (See *Replacing the drum unit* on page 12-30.)

Examples of poor print quality	Recommendation
 Black toner marks across the page	The drum unit may be damaged. Put in a new drum unit. (See *Replacing the drum unit* on page 12-30.) Make sure that you use paper that meets our specifications. (See *About paper* on page 2-1.) If you use label sheets for laser printers, the glue from the sheets may sometimes stick to the OPC drum surface. To clean the drum unit, follow the steps in the previous page. Do not use paper that has clips or staples because they will scratch the surface of the drum. If the unpacked drum unit is in direct sunlight or room light, the unit may be damaged.
 White lines across the page	Make sure that you use paper that meets our specifications. A rough surfaced paper or thick print media can cause the problem. Make sure that you select the appropriate media type in the printer driver. The problem may disappear by itself. Try printing multiple pages to clear this problem, especially if the printer has not been used for a long time. The drum unit may be damaged. Put in a new drum unit. (See *Replacing the drum unit* on page 12-30.)
 Lines across the page	Clean the inside of the printer and the primary corona wire in the drum unit. (See *Cleaning the drum unit* on page 12-24.) The drum unit may be damaged. Put in a new drum unit. (See *Replacing the drum unit* on page 12-30.)
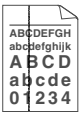 **Black lines down the page** Printed pages have toner stains down the page.	Clean the primary corona wire of the drum unit. Make sure the primary corona wire cleaner is at the home position (▲). The drum unit may be damaged. Install a new drum unit. (See *Replacing the drum unit* on page 12-30.) The toner cartridge may be damaged. Put in a new toner cartridge. (See *Replacing the toner cartridge* on page 12-25.) Make sure that a torn piece of paper is not inside the printer covering the scanner window. The fixing unit may be smudged. Call Brother or your dealer for service.
 White lines down the page	You may clear the problem by wiping the scanner window with a soft cloth. (See *Cleaning the printer* on page 12-23.) The toner cartridge may be damaged. Put in a new toner cartridge. (See *Replacing the toner cartridge* on page 12-25.)
 Page skewed	Make sure the paper or other print media is loaded properly in the paper tray and that the guides are not too tight or too loose against the paper stack. Set the paper guides correctly. If you are using the manual feed tray. (See *How to load paper* on page 2-3.) The paper tray may be too full. Check the paper type and quality. (See *About paper* on page 2-1.)

Examples of poor print quality	Recommendation
Curl or wave	Check the paper type and quality. High temperatures and high humidity will cause paper to curl. If you do not use the printer very often, the paper may have been in the paper tray too long. Turn over the stack of paper in the paper tray. Also, try fanning the paper stack and then rotating the paper 180° in the paper tray. Try printing using the straight-through output path. (See *How to load paper* on page 2-3.)
Wrinkles or creases	Make sure that paper is loaded properly. Check the paper type and quality. (See *About paper* on page 2-1.) Try printing using the straight-through output path. (See *How to load paper* on page 2-3.) Turn over the stack of paper in the tray or try rotating the paper 180° in the input tray.

The drum unit is a consumable item and it is necessary to replace it periodically.

Compatibility

If you are having difficulty sending or receiving a fax due to possible interference on the phone line, we recommend that you adjust the Equalization for compatibility with your phone line. The MFC adjusts the modem speed for fax operations.

```
Miscellaneous
2.Compatibility
```

1. Press **Menu**, **2**, **0**, **2**.
2. Press ▲ or ▼ to select `Normal`, `Basic` (or `High`).
   Press **Set**.
3. Press **Stop/Exit**.

Packing and shipping the MFC

Whenever you transport the MFC, use the packing materials that came with your machine. If you do not pack the MFC correctly, you may void your warranty.

1. Turn the MFC power switch off.
2. Unplug the MFC from the telephone wall socket.
3. Unplug the MFC from the AC outlet.
4. Unplug the parallel and USB cable from the MFC, if it is connected.
5. Open the front cover.
6. Remove the drum unit and toner cartridge assembly. Leave the toner cartridge installed in the drum unit.

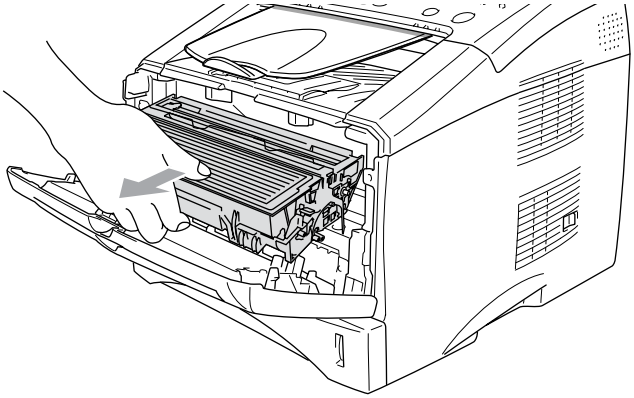

7 Place the drum unit and toner cartridge assembly into the plastic bag and seal the bag.

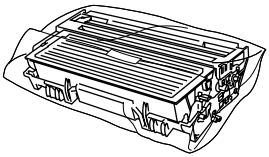

8 Close the front cover. Fold down the face-down output tray flap. Remove the telephone line cord, ADF document output support and ADF document support,

9 Wrap the MFC in the plastic bag and place it in the original carton with the original packing material.

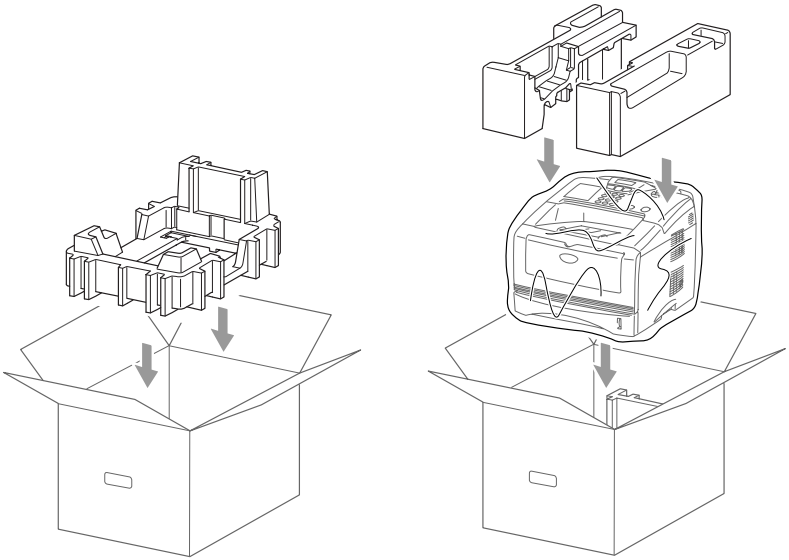

10 Pack the drum unit and toner cartridge assembly, telephone line cord, AC cord, and printed materials in the original carton as shown below:

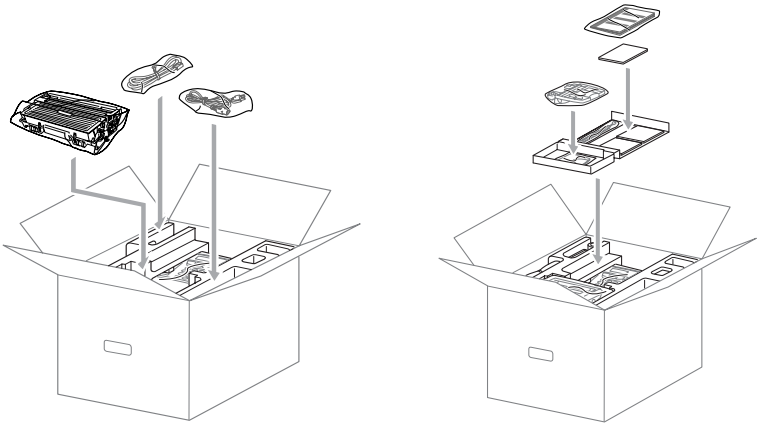

11 Close the carton and tape it shut.

Routine maintenance

Cleaning the scanner

1. Turn the MFC power switch off and unplug the MFC from the AC outlet.
2. Lift the control panel cover.
3. Clean the white bar and the glass cover.

   Moisten a small piece of clean soft, lint-free cloth with isopropyl alcohol and carefully remove dirt from the glass cover and the white bar of the scanner.

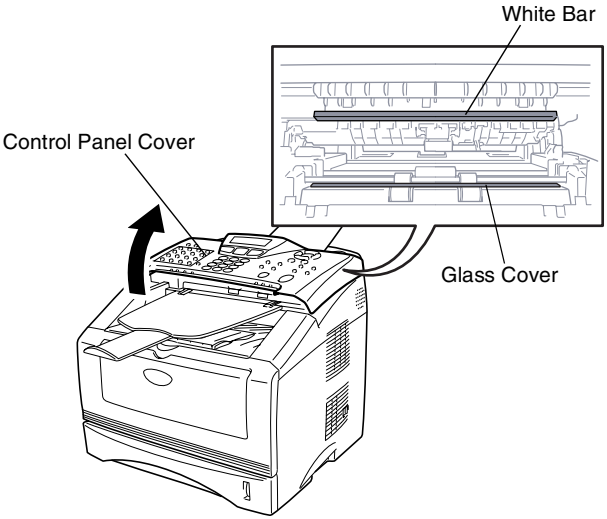

4. Close the control panel cover.

Cleaning the printer

Caution

- Do *not* use isopropyl alcohol to remove dirt from the control panel. It may crack the panel.
- Do *not* use isopropyl alcohol to clean the laser scanner window.
- Do *not* touch the scanner window with your fingers.
- The drum unit contains toner, so handle it carefully. If toner scatters and your hands or clothes get dirty, immediately wipe or wash it off with cold water.

1. Turn the MFC power switch off, unplug the MFC from the AC outlet and telephone cord and open the front cover.
2. Remove the drum unit and toner cartridge assembly.

WARNING

Just after you have used the MFC, some internal parts of the machine are extremely **HOT!** When you open the front cover of the MFC, never touch the shaded parts shown in the diagram below.

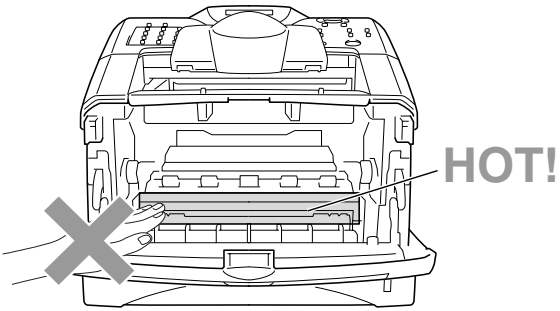

Front view

3 Gently clean the scanner window by wiping it with a clean soft dry cloth. Do *not* use isopropyl alcohol.

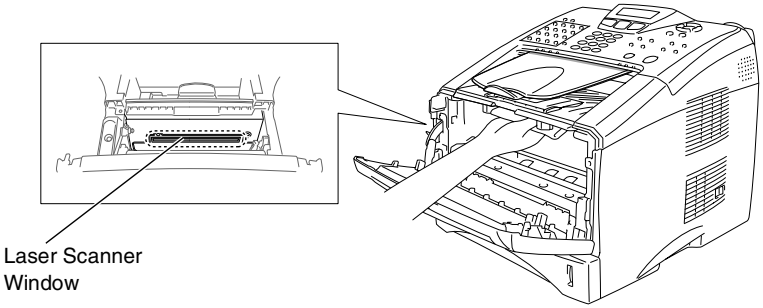

Cleaning the drum unit

We recommend placing the drum unit and toner cartridge assembly on a cloth or large disposable paper to avoid spilling and scattering toner.

1 Clean the primary corona wire inside the drum unit by gently sliding the blue tab from right to left several times.

2 Return the blue tab and snap it into the Home position (▼).

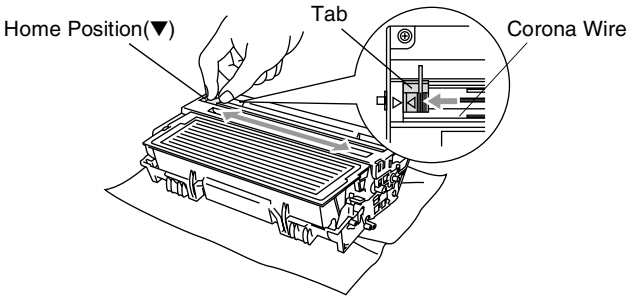

Caution

If the blue tab is not at Home position (▼), printed pages may have vertical stripes.

3 Reinstall the drum unit and toner cartridge assembly into the MFC. (See *Replacing the drum unit* on page 12-30.)

4 Close the front cover.

5 Plug in the power cord *first*, then the telephone cord.

Replacing the toner cartridge

The MFC can print *up to* 6,700 pages using a *high yield* toner cartridge (**TN-3060**). When the toner cartridge is running low, the LCD shows `Toner Low`. The MFC is supplied with a *standard* toner cartridge (**TN-3030**) that must be replaced after approximately 3,500 pages. Actual page count will vary depending on your average type of original document (i.e., standard letter, detailed graphics).

It is a good idea to keep a new toner cartridge ready for use when you see the `Toner Low` warning.

Discard the used toner cartridge according to local regulations, keeping it separate from domestic waste. Be sure to seal the toner cartridge tightly so toner powder does not spill out of the cartridge. If you have questions, call your local waste disposal office.

We recommend that you clean the MFC when you replace the toner cartridge.

How to replace the toner cartridge

WARNING

Just after you use the MFC, some internal parts of the MFC will be extremely **HOT!** So, never touch the shaded parts shown in the illustration.

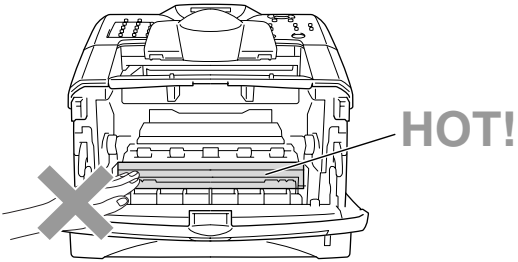

1 Open the front cover and pull out the drum unit.

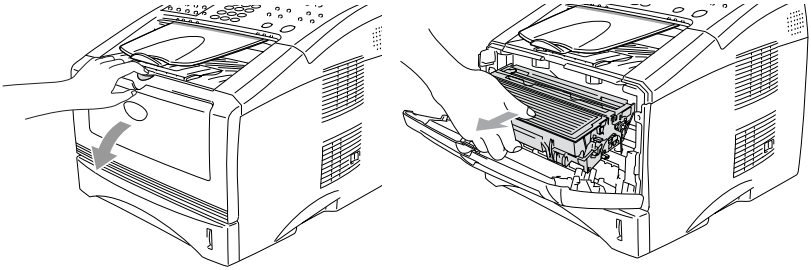

Caution

- Place the drum unit on a drop cloth or large piece of disposable paper to avoid spilling and scattering the toner.
- To prevent damage to the MFC from static electricity, do not touch the electrodes shown below.

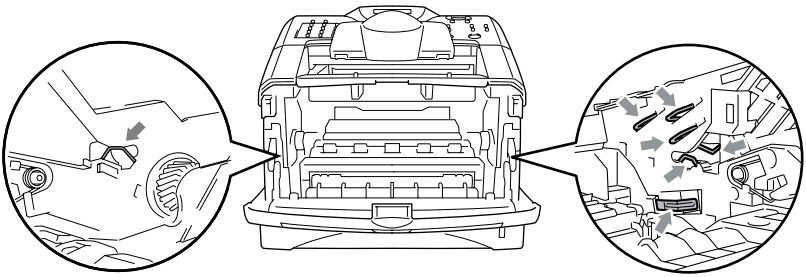

2 Hold down the lock lever on the right and pull the toner cartridge out of the drum unit.

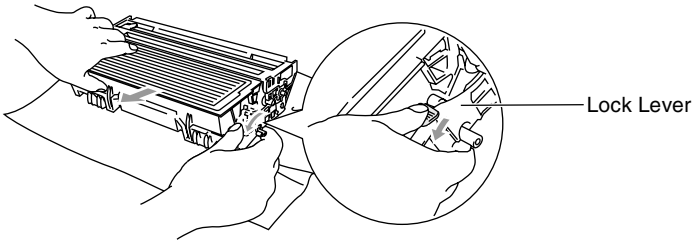

Caution

Handle the toner cartridge carefully. If toner scatters on your hands or clothes, immediately wipe it off or wash it with cold water.

3 Unpack the new toner cartridge. Place the used toner cartridge into the aluminum bag and discard it according to local regulations.

Caution

- Wait to unpack the toner cartridge until immediately before you install it in the MFC. If a toner cartridge is left unpacked for a long period of time, the toner life is shortened.
- Brother strongly recommends that you do not refill the toner cartridge provided with your MFC. We also strongly recommend that you continue to use only Genuine Brother Brand replacement toner cartridges (**TN-3030** and **TN-3060**). Using or attempting to use potentially incompatible toner and/or toner cartridges in your MFC may cause damage to the machine itself and/or it may result in unsatisfactory print quality. Our warranty coverage does not apply to any problem that was caused by the use of unauthorized third party toner and toner cartridges. To protect your investment and guarantee your print quality please continue to replace consumed toner cartridges with only Genuine Brother Branded Supplies.

4 Gently rock the toner cartridge from side to side five or six times to distribute the toner evenly inside the cartridge.

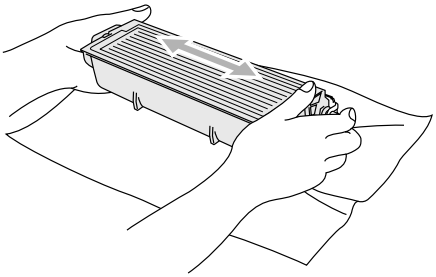

5 Remove the protective cover.

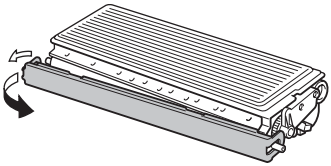

6 Insert the new toner cartridge in the drum unit until it clicks into place. If you put it in properly, the lock lever will lift automatically.

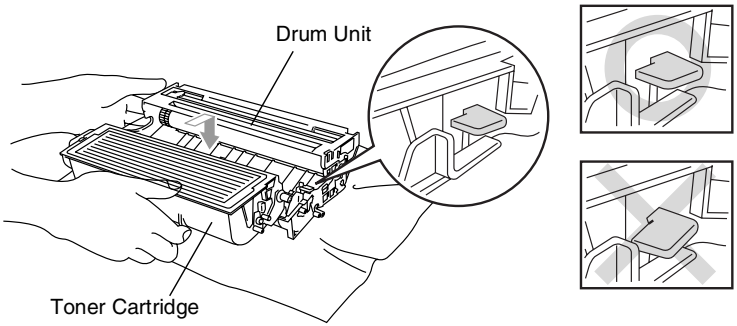

7 Clean the primary corona wire inside the drum unit by gently sliding the blue tab from right to left several times. Return the blue tab to the Home position (▼) before reinstalling the drum unit and toner cartridge assembly.

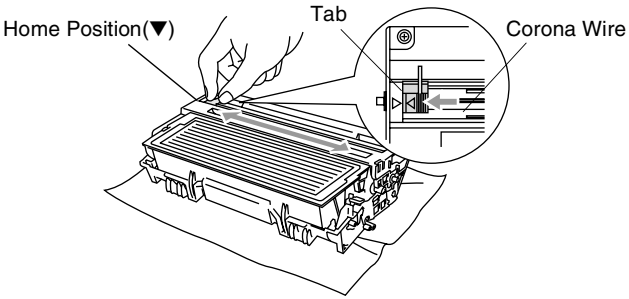

8 Reinstall the drum unit and toner cartridge assembly and close the front cover.

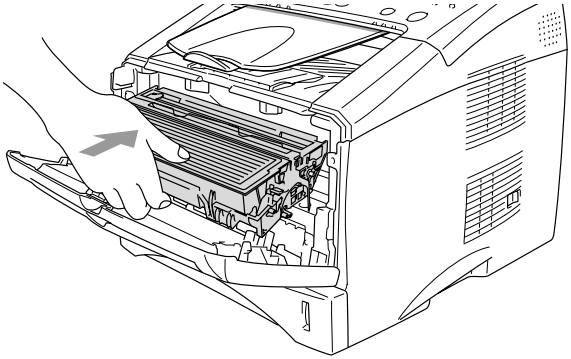

Replacing the drum unit

The MFC uses a drum unit to create print images on paper. If the LCD shows `Change Drum Soon`, the drum unit is near the end of its life and it is time to purchase a new one (**DR-3000**).

Even if the LCD shows `Change Drum Soon`, you may be able to continue printing without having to replace the drum unit for a while. However, if there is a noticeable deterioration in the output print quality (even before `Change Drum Soon` appears), then the drum unit should be replaced. You should clean the MFC when you replace the drum unit. (See *Cleaning the drum unit* on page 12-24.)

Caution

When removing the drum unit, handle it carefully because it contains toner. If toner scatters and your hands or clothes get dirty, immediately wipe or wash with cold water.

WARNING

Just after you have used the MFC, some internal parts of the MFC are extremely **HOT!** So, never touch the shaded parts shown in the illustration.

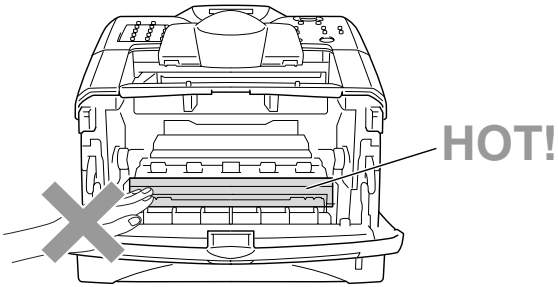

Follow these steps to replace the drum unit:

1. Press the cover release button and then open the front cover.
2. Remove the old drum unit and toner cartridge assembly. Place it on a drop cloth or disposable paper to avoid scattering toner.

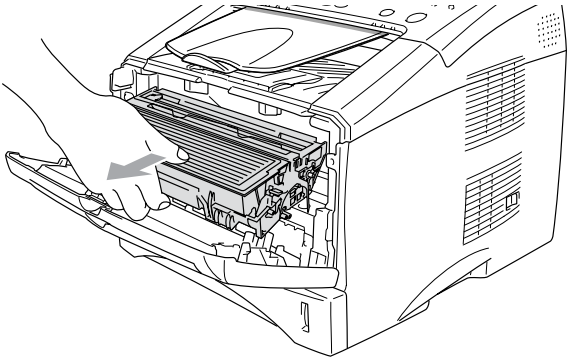

Caution

To prevent damage to the printer from static electricity, do not touch the electrodes shown below.

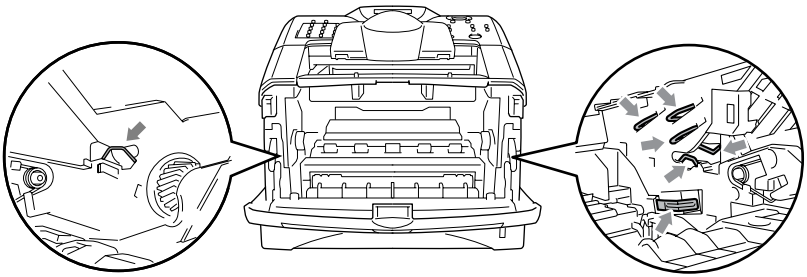

3 Hold down the lock lever on the right and pull the toner cartridge out of the drum unit. (See *Replacing the toner cartridge* on page 12-25.)

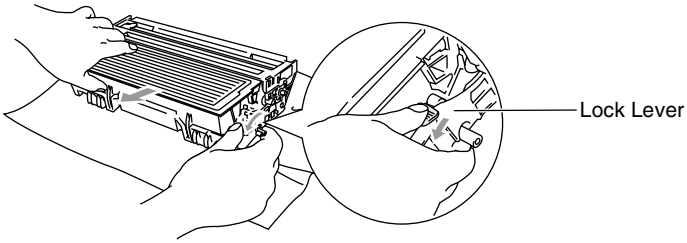

Discard the used drum unit according to local regulations, keeping it separate from domestic waste. Be sure to seal the drum unit tightly so toner powder does not spill out of the unit. If you have questions, call your local waste disposal office.

4 Wait to unpack the new drum unit until immediately before installing it. Place the old drum unit into the plastic bag and discard it according to local regulations.

5 Reinstall the toner cartridge into the new drum unit. (See *Replacing the toner cartridge* on page 12-25.)

6 Reinstall the new drum unit, keeping the front cover *open*.

7 Press **Clear/Back**.

8 Press **1** and when the LCD shows `Accepted`, and close the front cover.

```
Replace Drum?
1.Yes 2.No
```

Caution

If toner scatters and your hands or clothes get dirty, immediately wipe it off or wash it with cold water.

Checking the drum life

You can see the percentage of the drum's life that remains available.

1 Press **Menu**, **2**, **0**, **3**.

2 For two seconds, the LCD shows the available percentage of drum life.

```
Miscellaneous
3.Drum Life
```

Even if the remaining drum life is 0%, you may continue to use the drum unit until you have a print quality problem.

Page Counter

You can see number of total pages, copy pages, print pages and List/Fax (total fax print + total list print) pages that your MFC has printed.

1 Press **Menu**, **2**, **0**, **4**.

2 The LCD shows number of pages for `Total`.

Press ▲ or ▼ see `Copy`, `Print` and `List/Fax`.

3 Press **Stop/Exit**.

```
Miscellaneous
4.Page Counter
```

13 Optional accessories

Memory board

The memory board is installed on the main controller board inside the MFC. When you add the optional memory board, it increases the performance for both copier and printer operations.

Optional Memory	
32 MB	TECHWORKS 12457-0001
64 MB	TECHWORKS 12458-0001
128 MB	TECHWORKS 12459-0001

In general, the DIMM must have the following specifications:

Type:	100 pin and 32 bit output
CAS Latency:	2 or 3
Clock Frequency:	100MHz or more
Capacity:	32, 64, 128 MB
Height:	35mm or less
Parity:	NONE
DRAM Type:	SDRAM 4 Bank

Some DIMMs might not work with this MFC. For the latest information from Brother visit:

http://solutions.brother.com

Installing the optional memory board

WARNING

- DO NOT touch the surface of the main board within 15 minutes after turning off the power.
- Before installing the optional memory board, make sure there are no faxes in the memory.
- DO NOT unplug any internal connectors.
- Turn the MFC power switch off, before installing (or removing) the memory board.

1 Disconnect the telephone line cord from the MFC, turn the MFC power switch off, unplug the MFC power cord from the AC outlet, and then disconnect the interface cable.

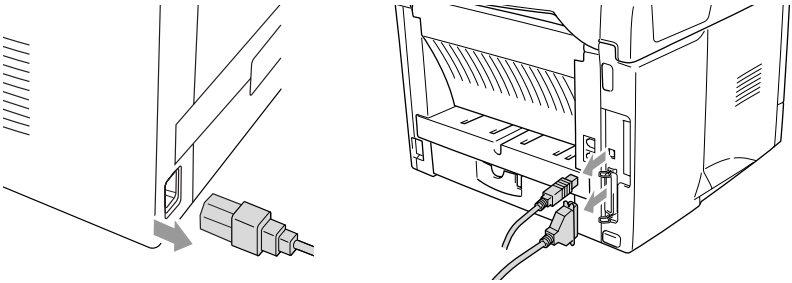

2 Remove the side cover. Loosen the two screws, and then remove the metal shield plate.

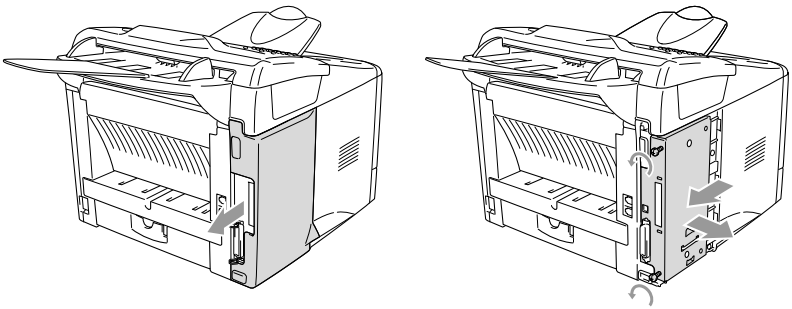

3 Unpack the DIMM and hold it by the edges.

WARNING

DIMM boards can be damaged by even a small amount of static electricity. Do not touch the memory chips or the board surface. Wear an antistatic wrist strap when you install or remove the board. If you do not have an antistatic wrist strap, frequently touch the bare metal on the printer.

4 Hold the DIMM with your fingers on the side edges and your thumb on the back edge. Line up the notches on the DIMM with the DIMM slot. (Check that the locks on each side of the DIMM slot are open or facing outwards.)

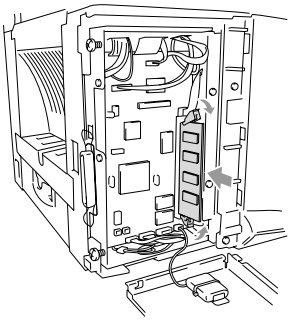

5 Press the DIMM straight into the slot (press firmly). Make sure the locks on each side of the DIMM click into place. (To remove a DIMM, you must release the locks.)

6 Put the metal plate back on and secure the metal plate with the two screws.

7 Put the side cover back on.

8 Reconnect any additional interface cables that you removed.

9 Reconnect the power cable and then turn on the MFC power switch.

10 Reconnect the telephone line cord.

- To check that you have installed the DIMM correctly, print the printer settings by using the selection in the driver and check the printout to make sure it shows the additional memory.
- You can check the current memory size in the System Setup list. (Press **Menu**, **5**, **5**.)

Network (LAN) board

When you add the optional Network (LAN) Board (**NC-9100h**), you can connect your MFC into the network to use the Internet FAX, Network Scanner, Network Printer and Network Management operations.

WARNING

DO NOT touch the surface of the main board within 15 minutes after turning off the power.

For more details about how to configure the Network board, please see the NC-9100h Network User's Guide on the CD-ROM supplied with the MFC.

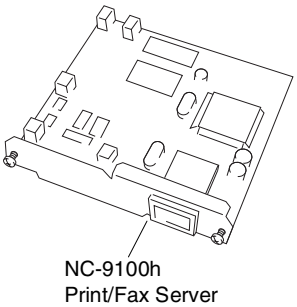

Before starting installation

Be careful when handling the NC-9100h. There are many delicate electronic components that are susceptible to damage from static electricity. To avoid such damage, use the following precautions when handling the board.

- Leave the NC-9100h in its anti-static bag until you are ready to install it.
- Make sure that you are adequately grounded before touching the NC-9100h. Use an anti-static wrist strap and a grounding mat if possible. If you do not have an anti-static wrist strap, touch the bare metal surface on the back of the machine before handling the NC-9100h.
- Avoid moving around the work area in order to eliminate static charge build-up.
- If possible, do not work on a carpeted area.
- Do not flex the board and do not touch the components on the card.

Tools Required:

Phillips Screwdriver ⊕

Step 1: Hardware installation

WARNING

- DO NOT touch the surface of the main board within 15 minutes after turning off the power.
- DO NOT unplug any internal connectors.
- Turn the MFC power switch off, before installing (or removing) the NC-9100h board.

1 Disconnect the telephone line cord from the MFC, turn the MFC power switch off, unplug the MFC power cord from the AC outlet, and then disconnect the interface cable.

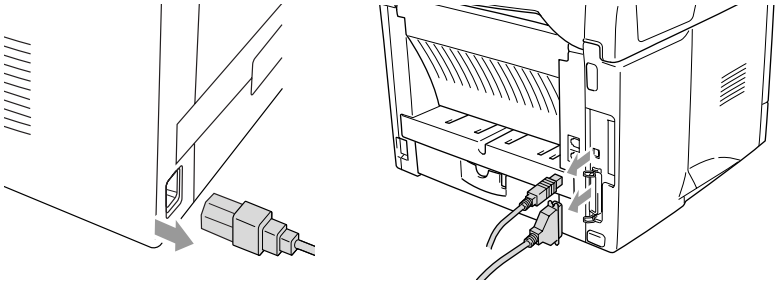

2 Remove the side cover. Loosen the two screws, and then remove the metal shield plate.

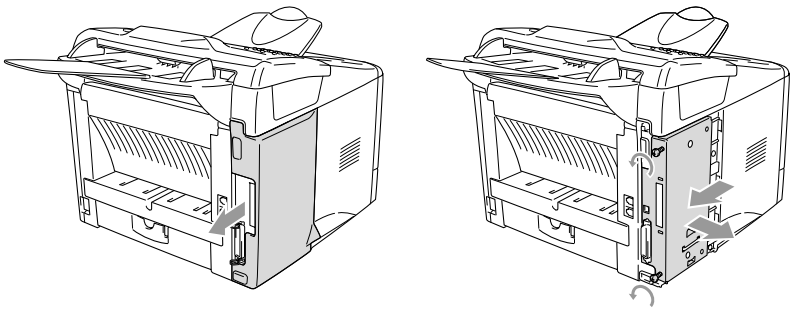

3 Loosen the two screws, and then remove the metal cover plate.

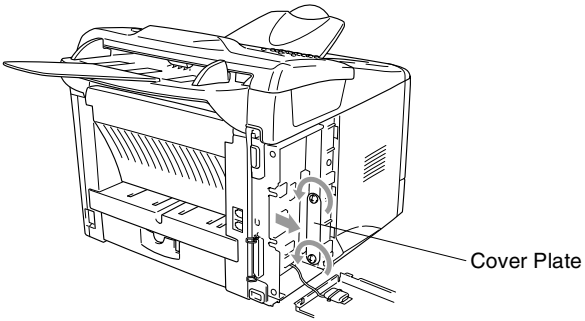

4 Plug the NC-9100h into connector P1 located on the main board as shown in the illustration (press firmly) and secure the NC-9100h with the two screws.

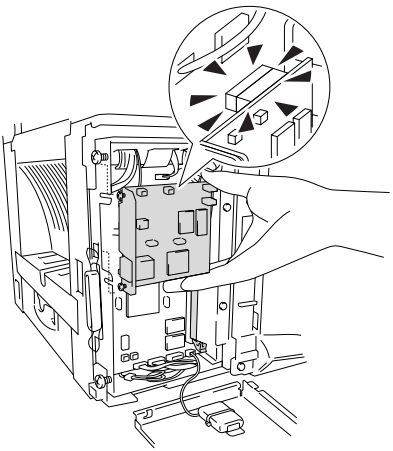

5 Put the metal shield plate back on and secure it with the two screws.

6 Put the side cover back on.

7 Reconnect any additional interface cables that you removed.

8 Reconnect the power cable and then turn on the MFC power switch.

9 Reconnect the telephone line cord.

10 Press the Test switch and print a network configuration page. (See *Test switch* on page 13-9.)

Step 2: Connecting the NC-9100h to an Unshielded Twisted Pair 10BASE-T or 100BASE-TX Ethernet Network

To connect the NC-9100h to a 10BASE-T or 100BASE-TX Network, you must have an Unshielded Twist Pair Cable. One side of the cable must be connected to a free port on your Ethernet hub and the other side must be connected to the 10BASE-T or 100BASE-TX connector (an RJ45 Connector) of the NC-9100h.

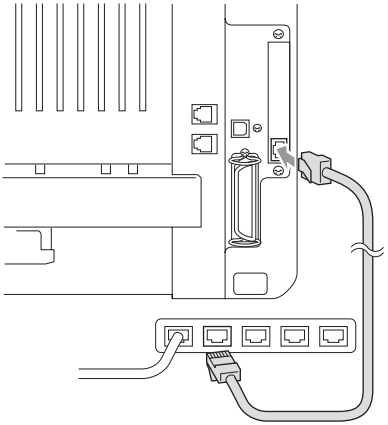

Verifying successful hardware Installation:

Plug in the AC power cord. After initialization and warm-up (this may take several seconds), the machine will come to a Ready state.

LED

No light:

If both of the two LEDs are off, then the print server is not connected to the network.

Link/Speed LED is orange: Fast Ethernet

This Link/Speed LED will be orange if the print server is connected to a 100BASETX Fast Ethernet network.

Link/Speed LED is green: 10 BASE T Ethernet

This Link/Speed LED will be green if the print server is connected to a 10 BASE T Ethernet.

Active LED is yellow:

The Active LED will blink if the print server is connected to the network.

If there is a valid connection to the network, the LED will blink orange or green.

Test switch

Short push: Prints the network configuration page.

Long push (more than 5 seconds): Reset the network configuration back to the default settings.

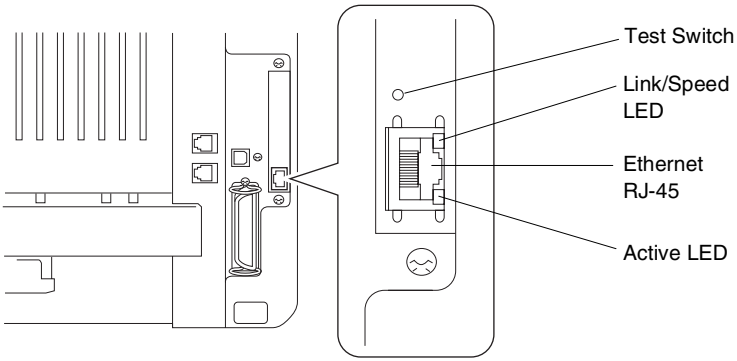

To set up the MFC on the Network, see the *NC-9100h Network User's Guide* on the CD-ROM.

Paper Tray #2

You can purchase the Paper Tray #2 accessory (**LT-5000**) to use as a third paper source. Tray #2 holds up to 250 sheets of 80 g/m^2 paper.

Paper Tray #2	Holds approx. 250 sheets of 80 g/m^2
Basis Weight	60 to 105 g/m^2
Moisture Content	4% to 6% by weight
We Recommend: Cut sheet:	Xerox Premier 80 g/m^2 Xerox Business 80 g/m^2 Mode DATACOPY 80 g/m^2 IGEPA X-Press 80 g/m^2

G Glossary

ADF (Automatic Document Feeder) The original document can be placed in the ADF and scanned one page at a time automatically.

Automatic Redial A feature that enables your MFC to redial the last fax number if the fax did not go through because the line was busy.

Auto Reduction Reduces the size of incoming faxes.

Automatic fax transmission Sending a fax without picking up the handset of an external phone.

Batch Transmission As a cost savings feature, all delayed faxes to the same fax number will be sent as one transmission.

Beeper The sound the keys make when they are pressed, an error occurs, or a fax has been received or sent.

Beeper volume Volume setting for the beep when you press a key or make an error.

Broadcasting The ability to send the same fax message to more than one location.

CNG tones The special tones (beeps) sent by fax machines during automatic transmission to tell the receiving machine that they are from a fax machine.

Communication error (or Comm. Error) An error during fax sending or receiving, usually caused by line noise or static.

Coding Method Method of coding the information contained in the original document. All fax machines must use a minimum standard of Modified Huffman (MH). Your MFC is capable of greater compression methods, Modified Read (MR), Modified Modified Read (MMR) and JBIG, if the receiving machine has the same capability.

Compatibility Group The ability of one fax unit to communicate with another. Compatibility is assured between ITU-T Groups.

Contrast Setting to compensate for dark or light original documents, by making faxes or copies of dark original documents lighter and light original documents darker.

Cover Page Prints a page at the other party's fax machine that contains the sender and recipient's name and fax number, number of pages and comment. You can generate an electronic cover page at the other end with pre-programmed information from memory or you can print a sample cover page to fax with your original documents.

Cover Page Message The comment that is on the Cover Page. This is a programmable feature.

Delayed Fax Sends your fax at a later time that day.

Deactivation Code (Fax/Tel mode) When the MFC answers a voice call, it pseudo/double-ring. You can pick up at an extension phone by pressing this code (**#51**).

Drum Unit A printing device for the MFC.

Dual Access Your MFC can scan outgoing faxes or scheduled jobs into memory at the same time it is sending a fax or receiving or printing an incoming fax.

ECM (Error Correction Mode) Detects errors during fax transmission and resends the pages of the fax that had an error.

Extension phone A telephone on the fax number that is plugged into a separate wall socket.

External phone A TAD (telephone answering device) or telephone that is connected to your MFC.

F/T Ring Time The length of time that the Brother MFC rings (when the Receive Mode setting is Fax/Tel) to notify you to pick up a voice call that it answered.

Fax Detect Enables your MFC to respond to CNG tones if you interrupt a fax call by answering it.

Fax Forwarding Sends a fax received into the memory to another pre-programmed fax number.

Fax Storage You can print stored faxes later at your MFC, or retrieve them from another location using the Remote Retrieval operations.

Fax/Tel You can receive faxes and telephone calls. Do not use this mode if you are using a telephone answering device (TAD).

Fax tones The signals sent by sending and receiving fax machines while communicating information.

Fine resolution Resolution is 203 x 196 dpi. It is used for small print and graphs.

Gray scale The shades of gray available for copying and faxing photographs.

Group number A combination of One-Touch, Speed-Dial numbers that are stored as a Speed-Dial number for Broadcasting.

Help list A printout of the complete Menu that you can use to program your MFC when you do not have the User's Guide with you.

Fax Journal Lists information about the last 200 incoming and outgoing faxes. TX means Transmit. RX means Receive.

Journal Period The pre-programmed time period between automatically printed Journal Reports. You can print the Journal on demand without interrupting this cycle.

LCD (liquid crystal display) The display screen on the MFC that shows interactive messages during On-Screen Programming and shows the date and time when the MFC is idle.

Manual fax When you lift the handset of your external telephone or press **Tel/R** so you can hear the receiving fax machine answer before you press **Start** to begin transmission.

Menu mode Programming mode for changing your MFC's settings.

MFL-Pro Suite Turns your MFC into a printer and a scanner and enables PC faxing using the MFC.

OCR (optical character recognition) The bundled ScanSoft® TextBridge® software application converts an image of text to text you can edit.

One-Touch Keys on the MFC control panel where you can store numbers for easy dialling. You can store a second number on each key if you press **Shift** and the One-Touch key together.

Out of Paper Reception Receives faxes into the MFC's memory when the machine is out of paper.

Overseas Mode Makes temporary changes to the fax tones to accommodate noise and static on overseas phone lines.

Pause Allows you to place a 3.5 second delay in the dialling sequence stored on Speed-Dial numbers. Press **Redial/Pause** as many times as needed for longer pauses.

Photo resolution A resolution setting that uses varying shades of gray for the best representation of photographs.

Polling The process of a fax machine calling another fax machine to retrieve waiting fax messages.

Pulse A form of rotary dialling on a telephone line.

Quick Dial List A listing of names and numbers stored in Speed-Dial memory, in numerical order.

Real Time Transmission When memory is full, you can send faxes in real time.

Remaining jobs You can check which jobs are waiting in memory and cancel jobs individually.

Remote Activation Code Press this code (**✳ 51**) when you answer a fax call from an extension or external phone to transfer the call to the MFC.

Remote Retrieval Access The ability to access your MFC remotely from a touch tone phone.

Remote Access Code Your own four-digit code that allows you to call and access your MFC from a remote location.

Resolution The number of vertical and horizontal lines per inch. See: Standard, Fine, Super Fine and Photo.

Ring Delay The number of rings before the MFC answers in Fax mode.

Ring Volume Volume setting for the MFC's ring.

Scanning The process of sending an electronic image of a paper original document into your computer.

Speed-Dial A pre-programmed number for easy dialling. You must press the **Search/Speed Dial** key and then **#**, and the three digit code to start the dialling process.

Standard resolution 203 x 98 dpi. It is used for regular size text and quickest transmission.

Station ID The stored information that appears on the top of faxed pages. It includes the sender's name and fax number.

Super fine resolution 203 x 392 dpi. Best for very small print and line art.

System Setup List A printed report that shows the current settings of the MFC.

TAD (telephone answering device) You can connect an external TAD to your MFC.

Temporary Settings You can select certain options for each fax transmission and copy without changing the default settings.

Tone A form of dialling on the telephone line used for Touch Tone telephones.

Toner cartridge An accessory that holds toner for the drum unit on Brother laser models.

Toner Save A process that causes less toner to be affixed to the page to extend the life of the toner assembly. This will make the receiving document significantly lighter.

Transmission The process of sending faxes over the phone lines from your MFC to the receiving fax machine.

True Type fonts The fonts that are used in the Windows® operating systems. If you install the Brother TrueType fonts, more types of fonts will be available for Windows® applications.

Xmit Report (Transmission Verification Report) A listing for each transmission, that shows its date, time and number.

S Specifications

Product description

The MFC-8220 is **5 in 1** Multi-Function Center: Printer, Copier, Scanner, Fax, and PC Fax (via your PC).

General

Memory Capacity	32 MB
Optional Memory	1 DIMM slot; Memory expandable up to 160 MB via 64 MB or 128 MB DIMM
Automatic Document Feeder (ADF)	Up to 30 sheets
Paper Tray	250 sheets (80 g/m^2)
Manual Feed Tray	Single sheet (80 g/m^2)
Printer Type	Laser
Print Method	Electrophotography by semiconductor laser beam scanning
LCD (Liquid Crystal Display)	16 characters × 2 lines
Warm-up	Max. 18 seconds at 23°C
Power Source	220-240V AC 50/60Hz
Power Consumption	Average Operating (Copying): 400 W or less (25°C) Peak: 1090 W or less Sleep: 9 W or less Standby: 75 W or less (25°C)
Dimensions (WDH)	375 × 451 × 335 (mm)
Weight	Without Drum/Toner Unit: 11.5 kg
Noise Level	Sound Pressure Copying : 53 dBA Standby : 30 dBA

General (continued)

Temperature	Operating:	10 - 32.5°C
	Storage:	0 - 40°C
Humidity	Operating:	20 to 80% (without condensation)
	Storage:	10 to 90% (without condensation)

Print media

Paper Input

Paper Tray

- Paper type:
  Plain paper, recycled paper and transparencies, envelopes (Manual Feed Tray)
- Paper size:
  A4, Letter, Legal, B5, Executive,
  A5, A6, B6 (ISO)
  Weight: 60 - 105 g/m^2 (Paper Tray)
  For more details, see *Paper specifications for each paper tray* on page 2-1.
- Maximum paper tray capacity: Approx. 250 sheets of 80 g/m^2 plain paper

Manual Feed Tray

- Paper size:
  Width: 69.8 - 220.0 mm
  Height: 116.0 - 406.4 mm
  Weight: 60 - 161 g/m^2

Paper Output

Up to 150 sheets of plain paper (Face down print delivery to the output tray)

Copy

Color/Monochrome	Monochrome
Copy Speed	Up to 20 copies/minute (A4 paper)
Multiple Copies	Stacks or Sorts up to 99 pages
Enlarge/Reduce	25% to 400% (in increments of 1%)
Resolution	Max. 300 x 600 dpi

Fax

Compatibility	ITU-T Group 3
Coding System	MH/MR/MMR/JBIG
Modem Speed	33600-2400 bps Automatic Fallback
Original Size	ADF Width: 148 mm to 216 mm ADF Height: 100 mm to 356 mm
Scanning Width	207.26 mm
Printing Width	207.26 mm
Gray Scale	256 levels
Polling Types	Standard, Secure, Timer, Sequential
Contrast Control	Automatic/Light/Dark (manual setting)

Resolution	• Horizontal 8 dot/mm
	• Vertical
	  • Standard 3.85 line/mm
	  • Fine, Photo 7.7 line/mm
	  • Super fine 15.4 line/mm

One-Touch Dial	32 (16 × 2)
Speed-Dial	300 locations
Automatic Redial	3 times at 5 minute intervals
Auto Answer	0, 1, 2, 3 or 4 rings (0, 1, 2, 3, 4 or 5 rings-Nordic countries only)
Communication Source	Public switched telephone network.
Memory Transmission	Up to 600[*1]/500[*2] pages
Out of Paper Reception	Up to 600[*1]/500[*2] pages

[*1] “Pages” refers to the “Brother Standard Chart No. 1” (a typical business letter, Standard resolution, JBIG code). Specifications and printed materials are subject to change without prior notice.

[*2] "Pages" refers to the "ITU-T Test Chart #1" (a typical business letter, Standard resolution, JBIG code). Specifications and printed materials are subject to change without prior notice.

Scanner

Color/Monochrome	Monochrome
TWAIN Compliant	Yes (Windows® 95/98/98SE/Me/2000 Professional and Windows NT® Workstation Version 4.0) Mac OS® 8.6-9.2/Mac OS® X 10.2.1-10.3 or greater
WIA Compliant	Yes (Windows® XP)
Resolution	Up to 9600 × 9600 dpi (interpolated)* Up to 300 × 600 dpi (optical) * Maximum 1200 x 1200 dpi scanning with Windows® XP (resolution up to 9600 x 9600 dpi can be selected by using the Brother scanner utility)
Original document Size	ADF Width: 148 mm to 216 mm ADF Height: 100 mm to 356 mm
Scanning Width	207.26 mm
Gray Scale	256 levels

Scanning directly to a networked PC is available with Windows® 98/98SE/Me/2000 Professional and XP.

Mac OS® X scanning is supported in Mac OS® X 10.2.1-10.3 or greater.

Printer

Emulation	PCL6 (Brother Printing System for Windows® emulation mode of HP LaserJet) and BR-Script (PostScript® 3™ language emulation)
Printer Drivers	Windows® 95/98/98SE/Me/2000 Professional/XP and Windows NT® Workstation Version 4.0 driver supporting Brother Native Compression mode and bi-directional capability Apple® Macintosh® QuickDraw® Driver and PostScript (PPD) for Mac OS® 8.6-9.2/Mac OS® X 10.1/10.2.1-10.3 or greater
Resolution	HQ1200 (Max. 2400 × 600 dpi)
Print Quality	Normal printing mode Economy printing mode (saves toner usage)
Print Speed	Up to 20 pages/minute A4 size (when loading paper from paper tray)
First Print	Less than 12 seconds (using A4 size paper in paper tray)

Interfaces

Interface	**Recommended Cable**
Parallel	A bi-directional shielded parallel cable that is IEEE 1284 compliant and no longer than 2 m.
USB	A Hi-Speed USB 2.0 cable that is no longer than 2 m.

Please make sure that you use a Hi-Speed USB 2.0 certified cable if your computer uses a Hi-Speed USB 2.0 interface.

Even if your computer has a USB 1.1 interface you can connect the MFC.

Computer requirements

<table>
<tr><th colspan="8">Minimum System Requirements</th></tr>
<tr><th colspan="2" rowspan="2">Computer Platform & Operating System Version</th><th rowspan="2">Processor Minimum Speed</th><th rowspan="2">Minimum RAM</th><th rowspan="2">Recommended RAM</th><th colspan="2">Available Hard Disk Space</th></tr>
<tr><th>Driver</th><th>Application Software*1</th></tr>
<tr><td rowspan="5">Windows® Operating System</td><td>95, 98, 98SE</td><td>Pentium 75MHz</td><td>24 MB</td><td>32 MB</td><td rowspan="5">80 MB</td><td rowspan="4">100 MB</td></tr>
<tr><td>Me</td><td>Pentium 150MHz</td><td rowspan="2">32 MB</td><td rowspan="2">64 MB</td></tr>
<tr><td>NT® Workstation 4.0</td><td>Pentium 75MHz</td></tr>
<tr><td>2000 Professional</td><td>Pentium 133MHz</td><td>64 MB</td><td>128 MB</td></tr>
<tr><td>XP</td><td>Pentium 233MHz</td><td>128 MB</td><td>256 MB</td><td>180 MB</td></tr>
<tr><td rowspan="2">Apple® Macintosh® Operating System</td><td>Mac OS® 8.6-9.2 (Printing, Scanning and PC-FAX Send Only)</td><td rowspan="2">All base models meet minimum Requirements</td><td>32 MB</td><td>64 MB</td><td rowspan="2">50 MB</td><td rowspan="2">200 MB</td></tr>
<tr><td>Mac OS® X 10.1/10.2.1-10.3 or greater (Printing, Scanning*2, PC-FAX Send and Remote Setup Only)</td><td>128 MB</td><td>160 MB</td></tr>
<tr><td colspan="8">NOTE: USB is not supported under Windows® 95 or Windows NT® WS 4.0.
All registered trademarks referenced herein are the property of their respective companies.</td></tr>
<tr><td colspan="8">For the latest drivers, go to the Brother Solutions Center at http://solutions.brother.com/</td></tr>
</table>

- *1 Application software is different for Windows® and Macintosh®.
- *2 Scanning is supported in 10.2.1-10.3 or greater.

Consumable items

Toner Cartridge Life Expectancy	TN-3030: Standard Toner Cartridge - Up to 3,500* pages TN-3060: High Yield Toner Cartridge - Up to 6,700* pages *(when printing letter size or A4 paper at 5% print coverage)
	Toner life expectancy will vary depending upon the type of average print job.
Drum Unit Life Expectancy	DR-3000: Up to 20,000 pages/drum unit
	There are many factors that determine the actual drum life, such as temperature, humidity, type of paper, toner that you use and the number of pages per print job.

Network (LAN) board (NC-9100h)

Option

When you add the optional Network (LAN) Board (NC-9100h), you can connect your MFC into the network to use the Internet FAX, Network Scanner, Network Printer and Network Management software operations for small workgroups.

SMTP/POP3 E-mail Services are required for Internet Fax.

Support for:

Windows® 95/98/Me/NT® 4.0/2000/XP
Novell NetWare 3.X, 4.X, 5.X
Mac OS® 8.6-9.2/
Mac OS® X 10.1/10.2.1-10.3 or greater
Ethernet 10/100 BASE-TX Auto Negotiation
TCP/IP, IPX/SPX, AppleTalk, DLC/LLC, NetBIOS
RARP, BOOTP, DHCP, APIPA, WINS
LPR/LPD, Port9100, SMTP/POP3
SMB (NetBIOS/ IP), IPP, SSDP, mDNS,
FTP SNMP, MIBII as well as Brother private MIB
TELNET, HTTP, TFTP

Included Utilities:

BRAdmin Professional and Web Based Management

- Scanning directly to a networked PC is not supported in Windows® 95, NT® and Mac OS®.
- BRAdmin Professional is not supported in Mac OS®.

I Index

A

Access codes, storing and dialling 7-7
ADF (automatic document feeder) 2-8
ADF cover 12-4
Answering machine (TAD)
  connecting 1-11
Auto Dial numbers
  storing 7-1
Automatic
  fax receive 5-1
  fax redial 6-7
  transmission 6-4

B

Back light 1-6
Broadcasting 6-14
  setting up Groups for 7-5

C

Cancelling
  Fax Forwarding 8-5
  fax jobs in memory 6-9
  Fax Storage 8-2, 8-5
  jobs awaiting redial 6-9
Cleaning (routine maintenance)
  drum unit 12-24
  printer 12-23
  scanner 12-22
CNG tones 1-8
Computer requirements S-6
Connecting
  external TAD 1-11
  external telephone 1-10
  two-line external TAD or telephone 1-14
Consumable items S-7
Contrast key (copying) 10-8
Control panel, overview 1-4
Copy
  Contrast key 10-8
  default settings, changing 10-12
  Enlarge/Reduce key 10-5
  enter Copy mode 10-1
  keys 10-4
  multiple 10-2
  Options key 10-9
  page layout 10-11
  paper 2-1
  Quality key (type of original document) 10-7
  single 10-2
  sort 10-11
  temporary settings 10-4
  tray use 4-11
Cordless phone 5-10
Cover page
  composing 6-10
  custom comments 6-11
  for all faxes 6-13
  for next fax only 6-12
  printed form 6-13
Credit card numbers, storing and dialling 7-7
Custom telephone features 1-16, 12-12

D

Date and Time 4-1
Delayed Batch
Transmission 6-18
Delayed Fax 6-17
Dialling
a pause 7-8
access codes and credit
card numbers 7-7
automatic fax redial 6-7
Groups 6-14
stored numbers 7-1
Drum unit
checking remaining life
.....12-33
replacing 12-30
Dual Access 6-7

E

ECM
(Error Correction Mode) 1-9
Ecology
Sleep Time 4-10
Toner Save 4-9
Enlarge/Reduce key
(copying) 10-5
Envelopes 2-6
Equalization 12-18
Error messages on LCD
BT Call Sign On 5-14
Check Paper 12-1
Comm. Error 12-2
Not Registered 12-3
Out of Memory 12-3
while scanning
a document 10-3
Extension telephones
using 1-14, 5-9
External telephone 1-10
using 7-9

F

Fax codes
Remote Access Code 8-3
Remote Activation Code 5-9
Remote Deactivation Code
.....5-9
Fax Detect 5-5
Fax Forwarding
changing remotely 8-5, 8-6
programming a number 8-1
Fax Storage 8-2
backup copy 8-1
printing from memory 5-8
turning on 8-2
Fax, stand-alone
Receive Mode 5-1
receiving
compatibility 12-18
difficulties 12-11
Fax Forwarding 8-5
reducing to fit
on paper 5-6
retrieving from
a remote site 8-6
Ring Delay, setting 5-3
sending
at end of conversation
.....6-4
automatic 6-4
Broadcasting 6-14
cancelling from
memory 6-9
compatibility 12-18
contrast 6-5
delayed 6-17
difficulties 12-11
enter Fax mode 6-1
from ADF 2-8
from memory
(Dual Access) 6-7

manual 6-3
overseas 6-16
Real Time
Transmission 6-8
resolution 6-6
Fax/Tel mode 5-1
answering at extension
phones 5-9
double-ringing
(voice calls) 5-4
Fax Receive Code 5-10
receiving faxes 5-9
Remote Activation Code
..... 5-9
Remote Deactivation Code
..... 5-9
setting F/T Ring Time 5-4
setting Ring Delay 5-3

G

Gray scale S-3, S-4
Groups for Broadcasting
storing 7-5

H

HELP
LCD messages 3-1
navigation keys 3-2

I

Interfaces S-5

J

Jams
original document 12-4
paper 12-5

L

LAN Configuration 3-13
LCD (liquid crystal display)
..... 1-4, 9-3
LCD Contrast 4-11
MFC status 1-6
programming 3-1

M

Maintenance, routine 12-22
Manual
dialling 7-9
receive 5-1
transmission 6-3
Manual feed tray 2-6
Memory Security 6-20, 6-21
Memory Storage 3-1
Menu table 3-1
Mode keys
Copy 10-1
Fax 6-1
Scan 1-4
Multi-line connections
(PBX) 1-16

O

One-Touch
changing 7-4
storing 7-1
Options key (copying) 10-9

P

Page Counter 12-33
Paper 2-1, 2-3, S-2
how to load 2-3
jams 12-5
size 4-7
size of original
document 2-8
type 4-6

Phone line
connections 1-12
difficulties 12-11
multi-line (PBX) 1-16
set 4-5
Polling
sending 6-18
Power
failure 3-1
save 4-11
Print
area 10-1
difficulty 12-11
fax from memory 5-8
improving the print quality 12-15
jams 12-5
resolution S-5
specifications S-5
Printer drivers S-5

Q

Quality key (copying) 10-7
Quick-Dial 7-1
Access codes and credit card numbers setting up/dialling 7-7
Broadcasting 6-14
using Groups 6-14
Group dial
changing 7-5
setting up Group for Broadcasting 7-5
One-Touch dial
changing 7-4
setting up 7-1
using 6-2, 6-14
Search 6-3
Speed-Dial
changing 7-4
setting up 7-3
using 6-2, 6-14

R

Receive Mode
External TAD 5-1
Fax Only 5-1
Fax/Tel 5-1
Manual 5-1
Redial/Pause 6-7
Reducing
copies 10-5
long faxes 5-6
Remote Retrieval 8-4
access code 8-3, 8-4
backup copy 8-1
commands 8-5
getting your faxes 8-4, 8-5, 8-6
Reports 9-1, 9-3
Auto Dial List 9-3
Fax Activity 9-3
Help List 9-3
Transmission Verification 9-1, 9-3
User Settings 9-3
Resolution
copy S-2
fax (Standard, Fine, SuperFine, Photo) S-3
print S-5
scan S-4
setting for next fax 6-6
Ring Delay, setting 5-3

S

Safety instructions ..... iii, 11-4
Setup
Date and Time 4-1
Station ID (fax header) 4-2

Shipping the MFC
..... 11-6, 12-19
Sleep Time 4-10
Sockets
EXT. socket
external telephone 1-10
TAD (answering machine)
..... 1-11
Speed-Dial
changing 7-4
storing 7-3

T

TAD (telephone answering
device), external 1-11, 5-1
connecting 1-12
Receive Mode 5-1
recording OGM 1-13
Text, entering 4-3
special characters 4-4
Toner cartridge
replacing 12-25, 12-26
Tray use, setting
copy 4-12
fax 4-13
Troubleshooting 12-1
error messages on LCD ... 12-1
if you are having
difficulty 12-11
incoming calls 12-12
network 12-14
paper handling 12-14
phone line 12-11, 12-18
print quality 12-14
printing 12-12
receiving or
printing faxes 12-11
scanning 12-13
sending faxes 12-11
software 12-13

V

Volume, setting
beeper 4-8
ring 4-8
speaker 4-9

R Remote Retrieval Access card

If you plan to receive fax messages while away from your MFC, carrying the Remote Retrieval Access Card printed below will serve as a convenient reminder of the retrieval procedures. Simply cut out the card and fold it to fit your wallet or organizer. Keeping it handy will help you derive the full benefit of your MFC's Fax Forwarding and Remote Retrieval features.

Fold →

CHECK RECEIVING STATUS

Press **9 7 1**

1 long beep — Fax messages
3 short beeps — No messages

CHANGE RECEIVE MODE

Press **9 8**

then for **External TAD,** press **1.**
Fax/Tel, press **2.**
Fax Only, press **3.**

EXIT REMOTE OPERATION

Press **9 0.**

4

REMOTE RETRIEVAL ACCESS CARD

Using Remote Access Code

1 Dial your fax number from a telephone or fax machine using touch tone.

2 When your MFC answers, immediately enter your Remote Access Code (3 digits followed by ✳).

3 Your MFC signals the kinds of messages it received:
1 long beep — Fax messages
No beeps — No messages.

4 After 2 short beeps, enter a command.

5 Press **9 0** to reset your MFC when you finish.

6 Hang up.

1

← Fold

Changing Remote Access Code

When you are at the machine:

1. Press **Menu**, **2**, **5**, **2**.
2. Enter a three-digit number from 000 to 998.
   The ✳ cannot be changed.
3. Press **Set**.
4. Press **Stop/Exit**.

Remote Commands

CHANGE FAX FORWARDING/FAX STORAGE SETTING

Press **9 5**.

then to **Turn feature Off**, press **1**.
Select Fax Forwarding, press **2**.
Program Fax Forwarding Number, press **4**. Enter the new fax number where you want your fax messages forwarded followed by # #.
Select Fax Storage, press **6**.

RETRIEVE A FAX

Press **9 6**

then to **Retrieve all faxes**, press **2**,
then enter the number of remote fax machine followed by # #.
After the beep, hang up and wait.
Erase all fax messages, press **3**.

Fold

Fold

This machine is approved for use in the country of purchase only, local Brother companies or their dealers will only support machines purchased in their own countries.

UK/IRE/SAF/PAN NORDIC
LF2714004②